Operating Instructions

Power Supply & Isolation Relay

for Switches

Model: RL-5900

KOBOLD

1. Contents

1. Contents....2
2. Note....3
3. Instrument Inspection....3
4. Regulation Use....3
5. Operating Principle....4
6. Mechanical Connection....4
   6.1 Front View....4
   6.2 Installation of devices outside of hazardous areas....5
7. Mechanical Connection....5
8. Electrical Connection....6
   8.1 Electrical Standards....6
9. Maintenance....7
10. Order code....7
11. Technical Information....8
12. Dimensions....8

Manufactured and sold by:

KOBOLD Instruments Inc.
1801 Parkway View Drive
Pittsburgh, PA 15205
Tel.: 412-788-2830
Fax: 412-788-4890
E-Mail: info@koboldusa.com
Internet: www.koboldusa.com

2. Note

Please read these operating instructions before unpacking and placing the unit in operation and follow the instructions precisely as described herein.
The devices are only to be used, maintained and serviced by persons familiar with these operating instructions and in accordance with local regulations applying to Health & Safety and prevention of accidents.

3. Instrument Inspection

Instruments are inspected before shipping and sent out in perfect condition.
Should damage to a device be visible, we recommend a thorough inspection of the delivery packaging. In case of damage, please inform your parcel service/forwarding agent immediately, since they are responsible for damages during transit.

Scope of delivery:
The standard delivery includes:

- Power Supply & Isolation Relay model: RL-59xx
- Operating Instructions

4. Regulation Use

Any use of the Power Supply & Isolation Relay, model: RL-59xx, which exceeds the manufacturer's specifications, will invalidate the warranty. Therefore, any resulting damage is not the responsibility of the manufacturer. The user assumes any and all risk for such usage.

The RL-59xx series Power Supply & Isolation Relay provides current switching capacity for flow, pressure, level or temperature primary switching devices such as reed contacts and transistors. It provides power for sensor excitation and it has an integrated isolation relay rated 10 A @ 240 VAC.

The data sheets of the individual devices contain the specific electrical data limits for the specific component and must be considered as an essential component of the instruction manual.

5. Operating Principle

The RL-59xx series Power Supply & Isolation Relay provides current switching capacity for flow, pressure, level or temperature primary switching devices such as reed contacts and transistors. It provides power for sensor excitation and it has an integrated isolation relay rated 10 A @ 240 VAC.

6. Mechanical Connection

Commissioning and installation must only be performed by competent professionals suitably trained for this purpose.

6.1 Front View

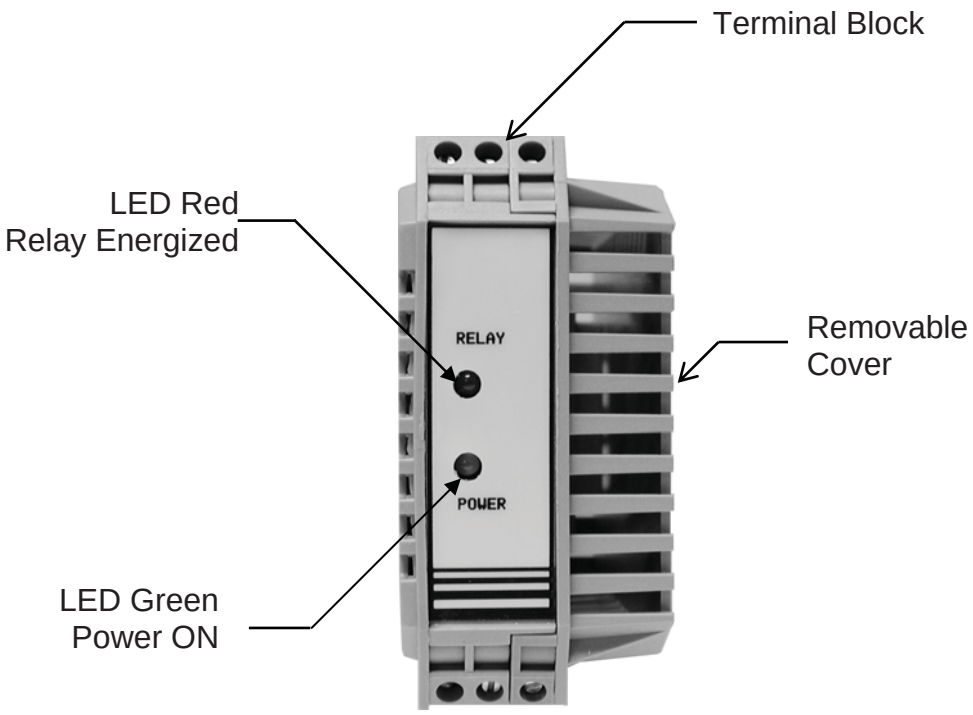

6.2 Installation of devices outside of hazardous areas

• The devices are constructed to satisfy the IP20 protection classification and must be protected accordingly from adverse environmental conditions such as water spray or dirt.

• The devices must be installed outside of the hazardous area!

7. Mechanical Connection

The devices can be easily mounted:

1. Panel / Wall mounting using a short section of 35 mm DIN rail (supplied)
2. Mounting onto an existing 35 mm standard DIN rail to DIN EN 50 022

When mounting to a DIN rail, the units are simply snapped on as shown.

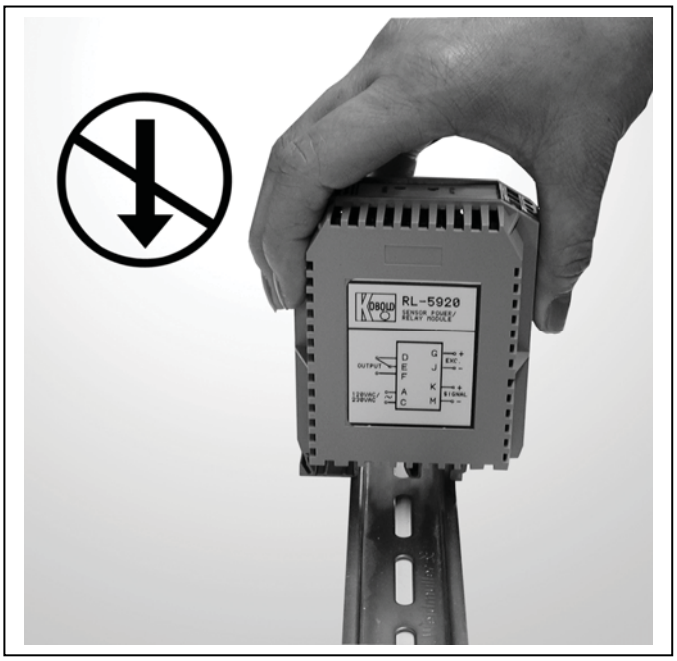

Figure 1

INCORRECT: Unit snapped on vertically

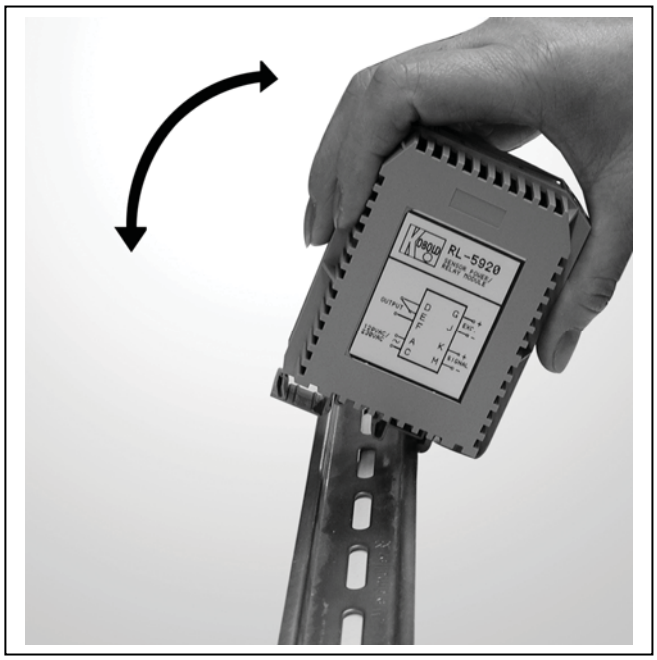

Figure 2

CORRECT: Unit snapped on at an angle

8. Electrical Connection

8.1 Electrical Standards

RL-59xx power supplies are build according to UL and CSA standards.

NOTE: Units are not UL or CSA approved.

DRY CONTACT OUTPUT DEVICE

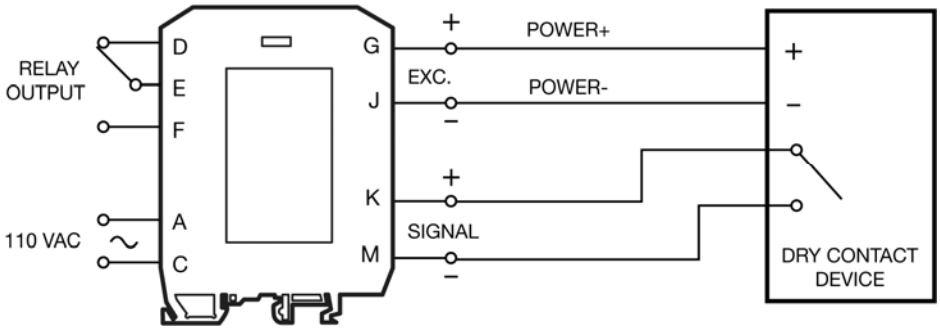

Figure 3

Note: For dry contact device, jumper JP1 must be installed (default configuration). See Fig. 5

TRANSISTOR OUTPUT DEVICE

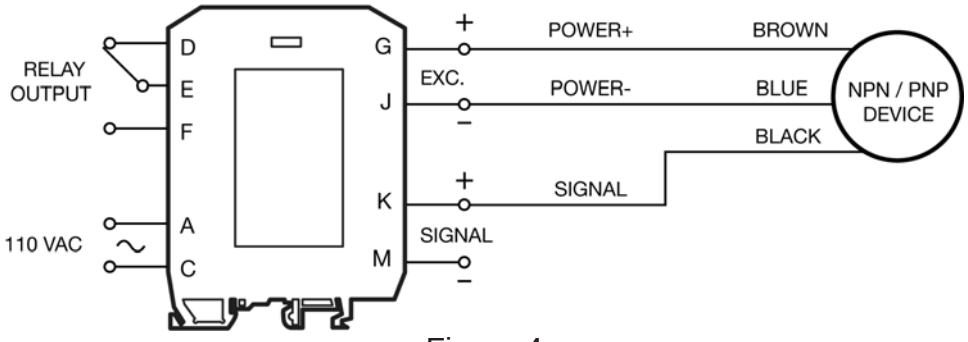

Figure 4

Notes:

1. For NPN output device, jumper JP1 must be installed (default configuration). See Fig. 5.
2. For PNP output device, jumper JP1 must be removed (open). See Fig. 5.
3. In PNP configuration, the output relay will be energized under normal conditions
4. EXC. (J) and SIGNAL (M) are internally connected (no external jumper wire required).

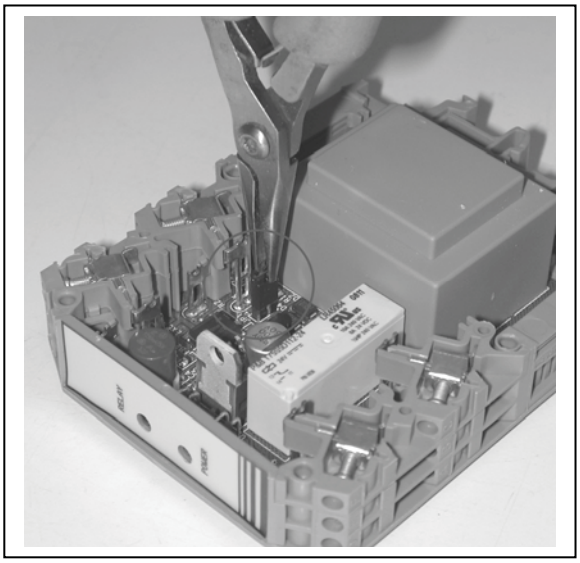

Figure 5

9. Maintenance

The performance characteristics of the devices remain stable, even over long periods of time, thus eliminating any need for adjustments. Therefore, maintenance is not required.

No changes may be made to devices. Repairs to devices must only be carried out by specially trained and qualified personnel

10. Order code

Supply Voltage	PART NUMBER Power Supply & Relay Excitation 24 VDC
110 VAC	RL-5901
230 VAC	RL-5902

Technical Information

Supply Voltage:	110 VAC, 230 VAC (per model code)
Output:	SPDT Relay, 10A @ 240 VAC 8A @ 24 VDC
Input:	Dry contact, NPN or PNP open collector, user selectable via jumper * For PNP configuration, the output relay will be energized under normal condition, fail safe * Sink / Source current 15 mA max.
Output:	SPDT Relay, 10A @ 240 VAC 8A @ 24 VDC
Excitation:	24 VDC (+/- 2%) 120 mA regulated, fuse protected
Indicators:	LED Green – Power ON LED Red – Relay energized
Housing:	Molded polyamide NEMA 1/IP20 DIN RAIL mount
Temperature:	0°F to 130°F
Humidity:	0 to 95% RH

11. Dimensions

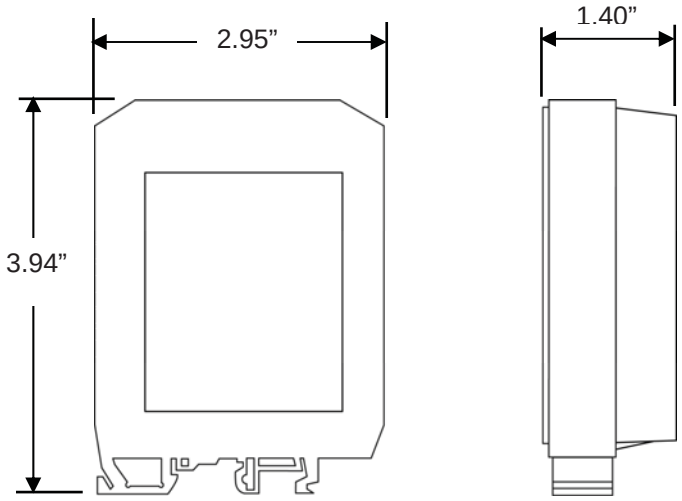

Operating Instructions

Power Supply & Latching Relay

For Switches

Model: RL-6000

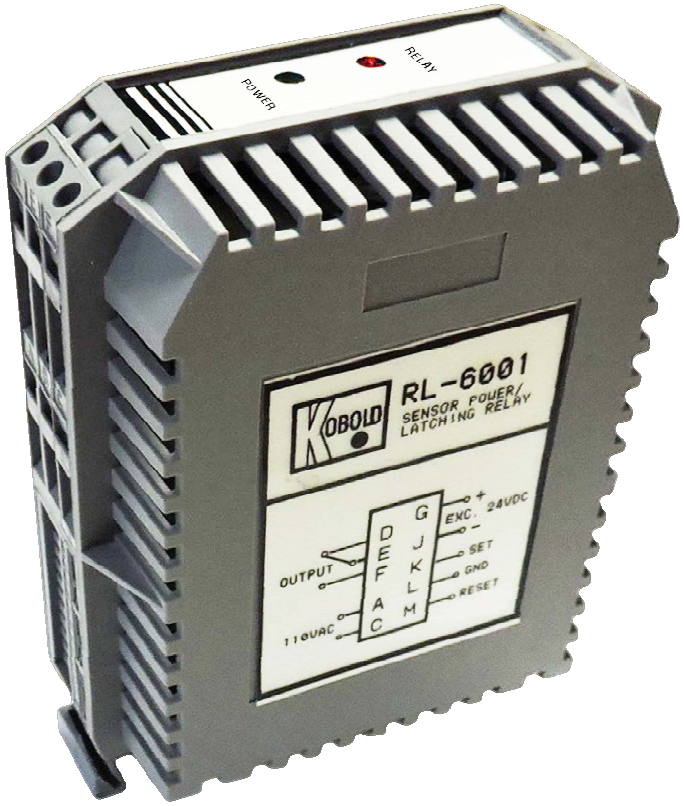

KOBOLD

1. Contents

1. Contents 2
2. Note 3
3. Instrument Inspection 3
4. Regulation Use 3
5. Operating Principle 4
6. Mechanical Connection 6
    6.1 Front View 6
    6.2 Installation of devices 6
7. Electrical Connection 7
    7.1 Electrical Standards 7
8. Maintenance 10
9. Troubleshooting 10
10. Order code 10
11. Technical Information 11
12. Dimensions 11

Manufactured and sold by:

Kobold Instruments Inc.
1801 Parkway View Drive
Pittsburgh, PA 15205
Tel.: 412-788-2830
Fax: 412-788-4890
E-Mail: info@koboldusa.com
Website: www.koboldusa.com

2. Note

Please read these operating instructions before unpacking and placing the unit in operation and follow the instructions precisely as described herein.
The devices are only to be used, maintained and serviced by persons familiar with these operating instructions and in accordance with local regulations applying to Health & Safety and prevention of accidents.

3. Instrument Inspection

Instruments are inspected before shipping and sent out in perfect condition.
Should damage to a device be visible, we recommend a thorough inspection of the delivery packaging. In case of damage, please inform your parcel service/forwarding agent immediately, since they are responsible for damages during transit.

Scope of delivery:
The standard delivery includes:

- Power Supply & Latching Relay model: RL-6000
- Operating Instructions

4. Regulation Use

Any use of the Power Supply & Latching Relay, model: RL-6000, which exceeds the manufacturer's specifications, will invalidate the warranty. Therefore, any resulting damage is not the responsibility of the manufacturer. The user assumes any and all risk for such usage.

The RL-6000 series Power Supply & Latching Relay provides current switching capacity for flow, pressure, level or temperature primary switching devices such as reed contacts and transistors. It provides power for sensor excitation and it has an integrated isolation relay rated 10 A @ 240 VAC. Reed switches input are protected. The PNP or NPN inputs are protected and don't require a pull-up or pull-down resistor.

The data sheets of the individual devices contain the specific electrical data limits for the specific component and must be considered as an essential component of the instruction manual.

5. Operating Principle

The RL-6000 series Power Supply & Latching Relay provides current switching capacity for flow, pressure, level or temperature primary switching devices such as reed contacts and transistors. It provides power for sensor excitation and it has an integrated isolation relay rated 10 A @ 240 VAC.

The RL-6000 series is designed to work with two input signals. A momentary signal on the “START” terminal will automatically latch “ON” the output relay. A momentary signal on the “STOP” terminal will automatically latch “OFF” the output relay.

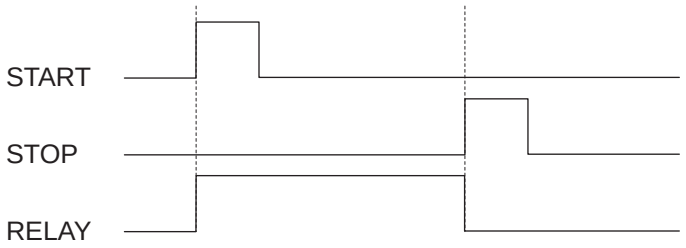

The RL-6000 is well suited for “Pump-Up” or “Pump-Down” control applications. For a “Pump-Up” application, a normally closed level switch, in dry condition, must be installed at the bottom of the reservoir and a normally opened level switch, in dry condition, at the top. The normally closed switch (low level) is connected to the “Start” terminal of the RL-6000 module and the normally opened switch (high level) to the “Stop” terminal. When the level inside the reservoir goes below the low level switch, the relay is then activated and the pump will start filling the reservoir. When the level reaches the high level switch, the relay is deactivated and the pump stops. The pump will stay off until the level goes back below the low level switch.

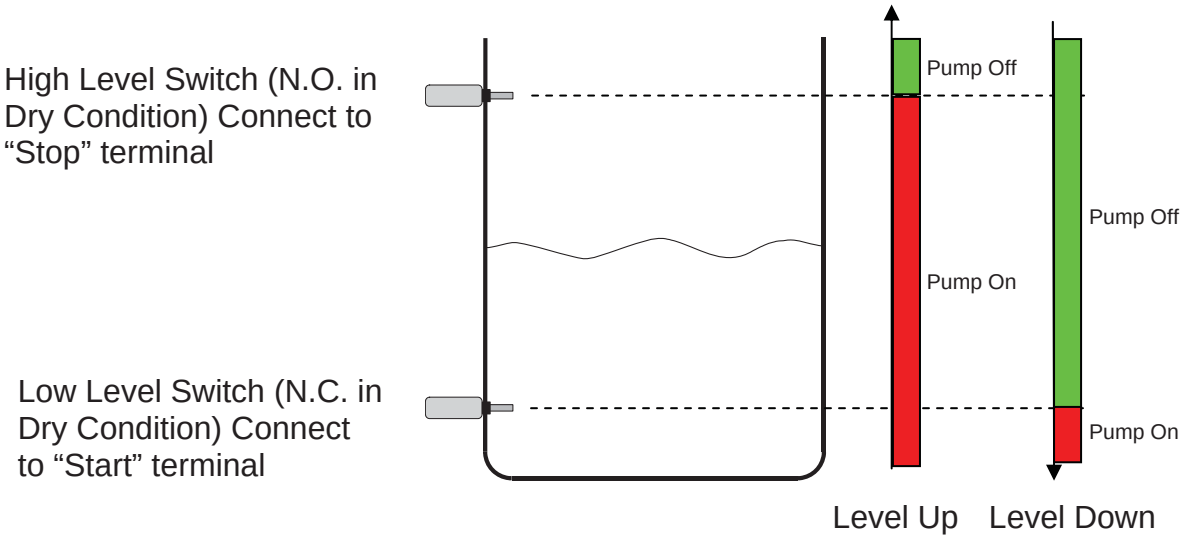

Pump-Up application

For a “Pump-Down” application, a normally closed level switch, in dry condition, must be installed at the bottom of the reservoir and a normally opened level switch, in dry condition, at the top. The normally closed switch (low level) is connected to the “Start” terminal of the RL-6000 module and the normally opened switch (high level) to the “Stop” terminal. When the level inside the reservoir goes above the high level switch, the relay is then activated and the pump will start emptying the reservoir. When the level reaches the low level switch, the relay is deactivated and the pump stops. The pump will stay off until the level goes back above the high level switch.

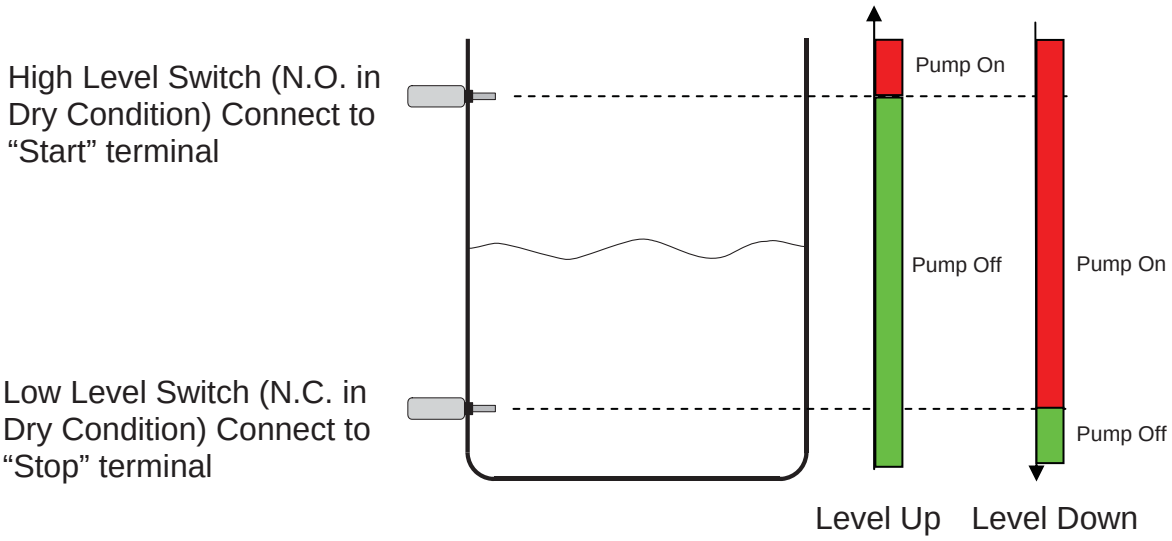

Pump-Down application

6. Mechanical Connection

Commissioning and installation must only be performed by competent professionals suitably trained for this purpose.

6.1 Front View

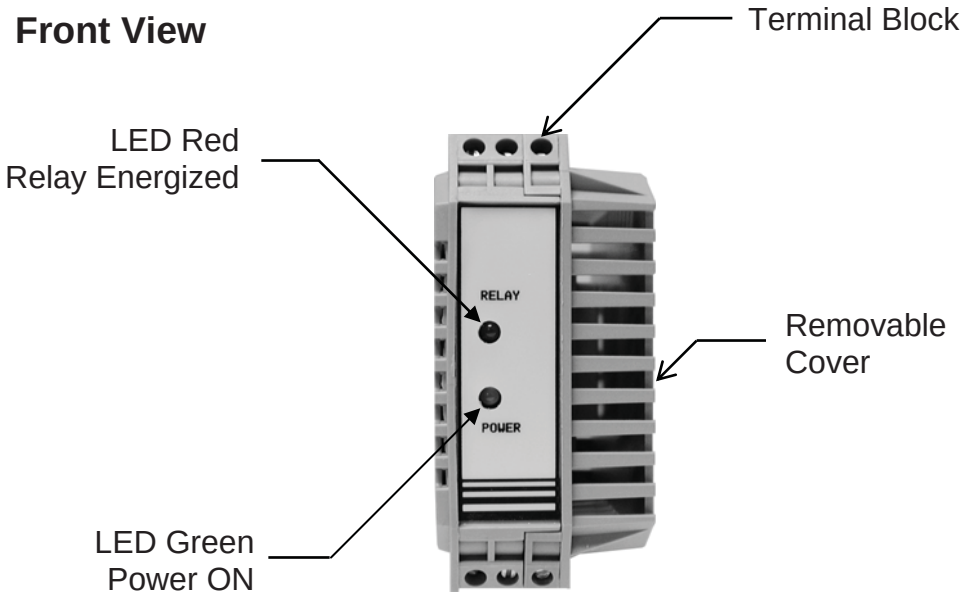

6.2 Installation of devices

The devices are constructed to satisfy the IP20 protection classification and must be installed within an electrical enclosure with suitable protection (as example NEMA 4 or IP65) in order to be protected accordingly from adverse environmental conditions such as water spray or dirt.

The device can be easily mounted on a 35 mm standard DIN rail to DIN EN 50 022

When mounting on the DIN rail, the units are simply snapped on. The expenditure on wiring for the power supply is significantly reduced by using "Power Rail".

Figure 1

INCORRECT: Unit snapped on vertically

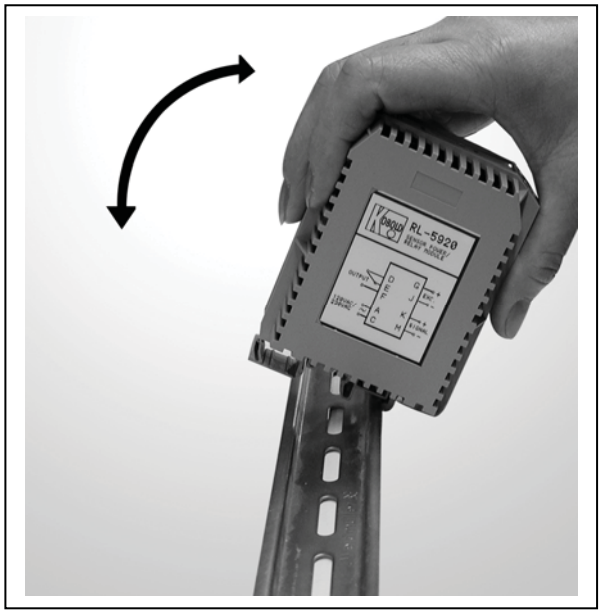

Figure 2

CORRECT: Unit snapped on at an angle

7. Electrical Connection

7.1 Electrical Standards

RL-6000 Power Supply & Latching Relay is built according to UL and CSA standards.

They are not UL or CSA approved.

ATTENTION! Ensure that the voltage levels of your supply system are in agreement with the voltage levels given on the type label of the device.

- Make sure that the electric supply lines are not active during connection to this device.
- Improper wiring can lead to damage of this device as well as injury to the user.
- Make sure that installation, wiring, and circuit protection are **in accordance with all local electrical codes**.
- Make sure the supply circuit **provides adequate fuse or circuit breaker protection** that is in accordance with the circuit's current rating.
- Make sure that a **motor contactor relay or starter is used to energize the pump circuit if the pump's current rating exceeds the RL-6000's relay rating**.

DRY CONTACT OUTPUT DEVICE

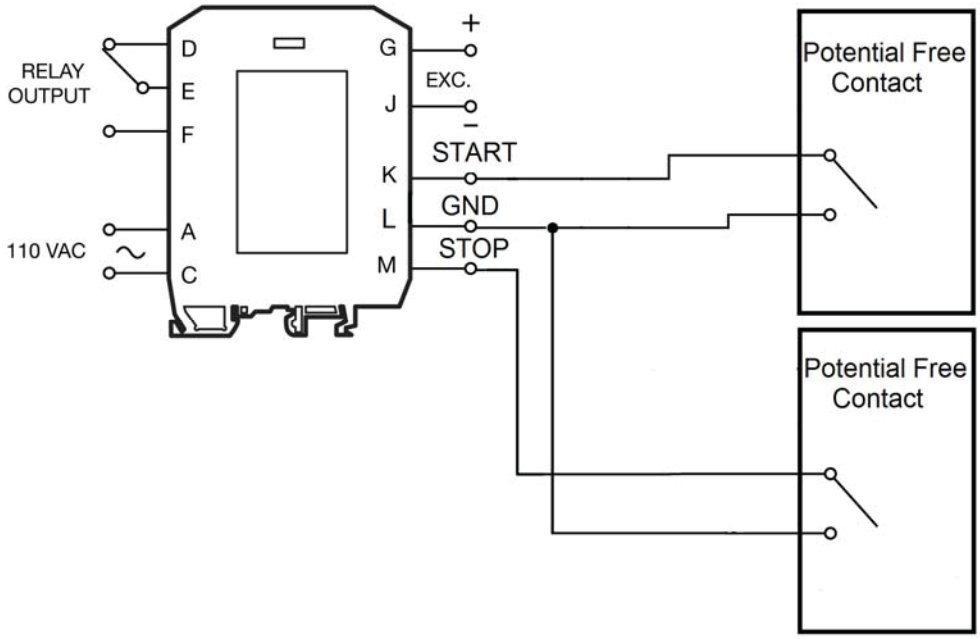

Figure 3

Note: For dry contact devices, jumpers P1 and P2 must be set to position 1 (Figure 4).

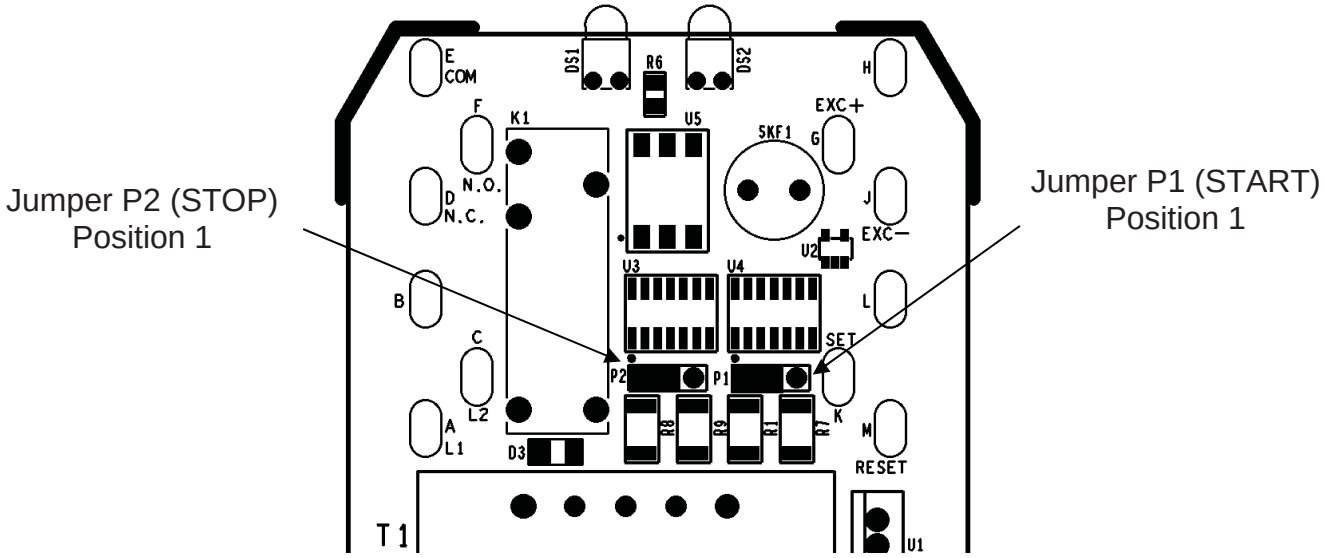

Figure 4

TRANSISTOR OUTPUT DEVICE

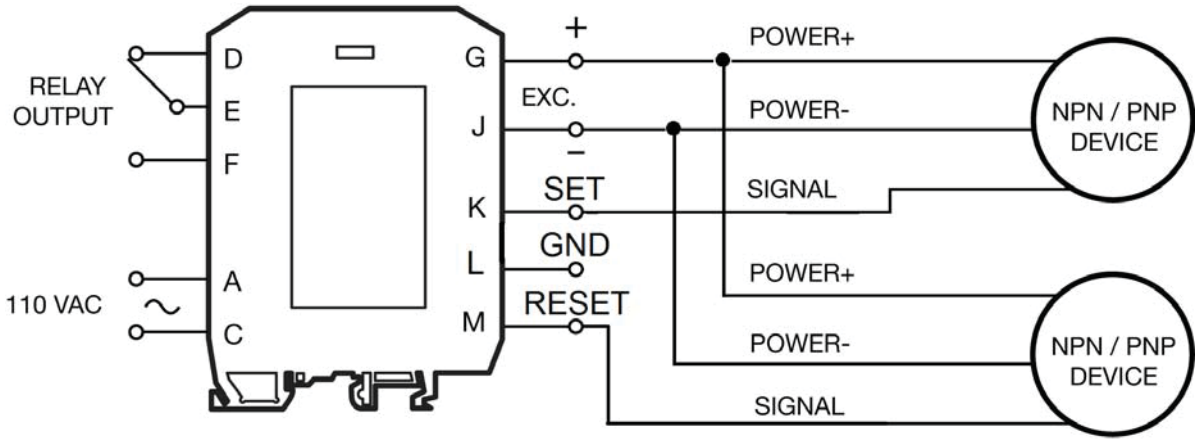

Figure 5

Notes:

1. In NPN configuration, the corresponding jumper (P1 for START or P2 for STOP) must be set to position 1 (Figure 4).
2. In PNP configuration, the corresponding jumper (P1 for START or P2 for STOP) must be set to position 2 (Figure 6).

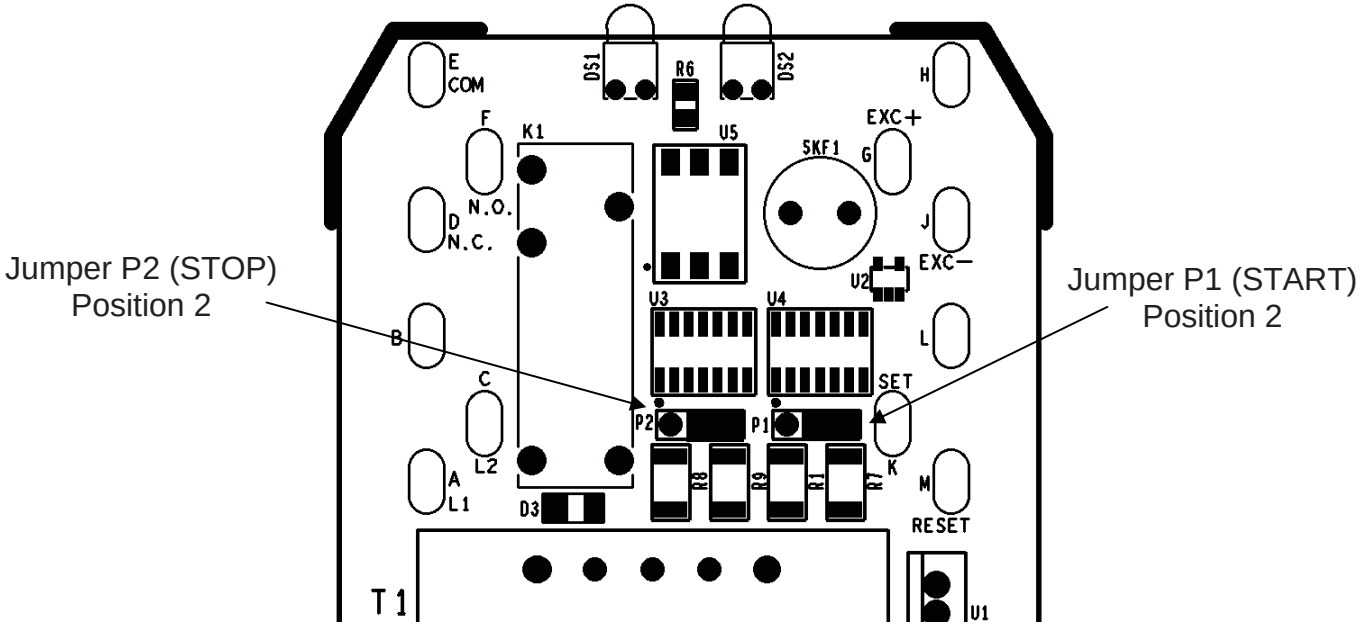

Figure 6

8. Maintenance

The RL-6000 series Power Supply & Latching Relay requires absolutely no maintenance. Depending on the type of level sensors used and the process conditions, maintenance to the sensors may be required. Verify and follow maintenance procedures according to the sensor maintenance manual.

There are no user serviceable parts inside the Type MSR module. If repair is required please contact your local Kobold sales office to arrange a return for repair.

9. Troubleshooting

The relay does not operate:

- Check that supply voltage is applied to the L (A) and N (C) terminals on the module.
- Check for 24 VDC across terminals G and J. If supply voltage is applied and 24 VDC is not measured across G and J, the module may be faulty.
- Check level switch operation and cabling from the tank location to the module. Temporarily remove the switch inputs from the module and simulate level switch closure by using jumper wires across input terminals.
- When simulating level switch closures the relay does not activate, the relay may be faulty.
- If the relay activates, but does not start the pump, the output wiring or pump circuit may be faulty.

10. Order code

Supply Voltage	PART NUMBER
	Power Supply & Latching Relay
	Excitation 24 VDC
110 VAC	RL-6001
230 VAC	RL-6002
24 VDC	RL-6003

11. Technical Information

Inputs:	Dry contact, NPN or PNP open collector, user selectable • Sourcing current = 5 mA max. • Sinking current = 3.5 mA max.
Excitation:	24 VDC (+/- 2%) 80 mA regulated, fuse protected
Supply Voltage:	110 VAC, 230 VAC, 24 VDC
Output:	SPDT Relay, 10A @ 240 VAC, 8A @ 24 VDC
Indicators:	LED Green – Power ON LED Red – Relay energized
Housing:	Molded Polyamide, NEMA 1/IP 20, 35mm DIN RAIL mountable
Temperature:	0 °F to 130 °F
Humidity:	0 to 95 %RH, Non-condensing

12. Dimensions

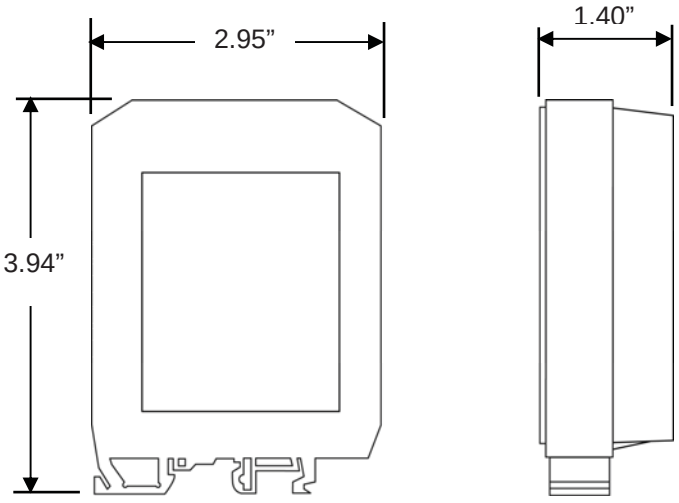

Operating Instructions

Isolation Relay

for Switches

Model: RL-6100

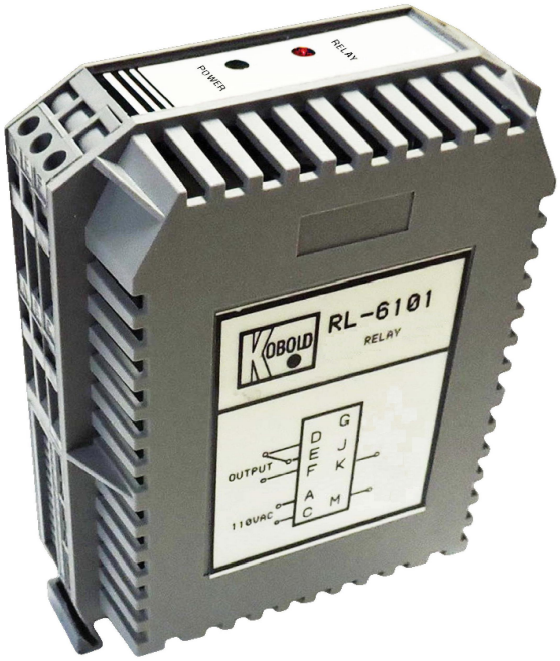

1. Contents

1. Contents....2
2. Note....3
3. Instrument Inspection....3
4. Regulation Use....3
5. Operating Principle....4
6. Mechanical Connection....4
   6.1 Front View....4
   6.2 Installation of devices outside of hazardous areas....5
7. Mechanical Connection....5
8. Electrical Connection....6
   8.1 Electrical Standards....6
9. Maintenance....7
10. Order code....7
11. Technical Information....7
12. Dimensions....8

Manufactured and sold by:

KOBOLD Instruments Inc.
1801 Parkway View Drive
Pittsburgh, PA 15205
Tel.: 412-788-2830
Fax: 412-788-4890
E-Mail: info@koboldusa.com
Internet: www.koboldusa.com

2. Note

Please read these operating instructions before unpacking and placing the unit in operation and follow the instructions precisely as described herein.
The devices are only to be used, maintained and serviced by persons familiar with these operating instructions and in accordance with local regulations applying to Health & Safety and prevention of accidents.

3. Instrument Inspection

Instruments are inspected before shipping and sent out in perfect condition.
Should damage to a device be visible, we recommend a thorough inspection of the delivery packaging. In case of damage, please inform your parcel service/forwarding agent immediately, since they are responsible for damages during transit.

Scope of delivery:
The standard delivery includes:

- Isolation Relay model: RL-61xx
- Operating Instructions

4. Regulation Use

Any use of the Isolation Relay, model: RL-61xx, which exceeds the manufacturer's specifications, will invalidate the warranty. Therefore, any resulting damage is not the responsibility of the manufacturer. The user assumes any and all risk for such usage.

The RL-61xx series Isolation Relay provides current switching capacity for flow, pressure, level or temperature primary switching devices such as reed contacts and transistors. It provides power for sensor excitation and it has an integrated isolation relay rated 10 A @ 240 VAC.

The data sheets of the individual devices contain the specific electrical data limits for the specific component and must be considered as an essential component of the instruction manual.

5. Operating Principle

The RL-61xx series Isolation Relay provides current switching capacity for flow, pressure, level or temperature primary switching devices such as reed contacts and transistors. It has an integrated isolation relay rated 10 A @ 240 VAC.

6. Mechanical Connection

Commissioning and installation must only be performed by competent professionals suitably trained for this purpose.

6.1 Front View

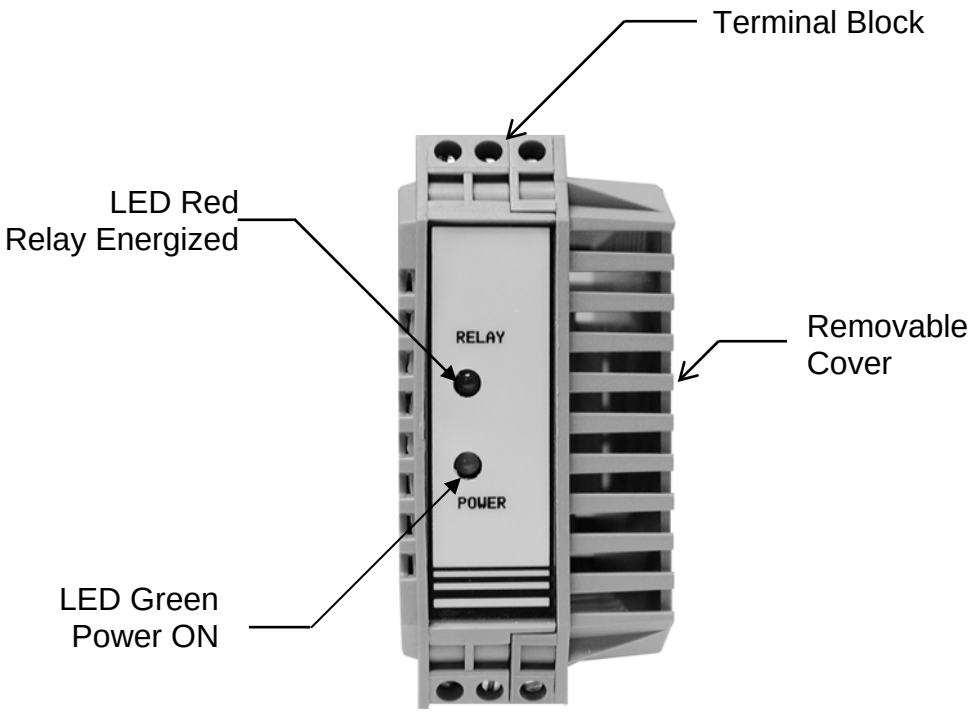

6.2 Installation of devices outside of hazardous areas

• The devices are constructed to satisfy the IP20 protection classification and must be protected accordingly from adverse environmental conditions such as water spray or dirt.

• The devices must be installed outside the hazardous area!

7. Mechanical Connection

These devices can be easily mounted in two ways:

1. Panel / Wall mounting
2. Mounting on a 35 mm standard DIN rail to DIN EN 50 022

When mounting on the DIN rail, the units are simply snapped on.

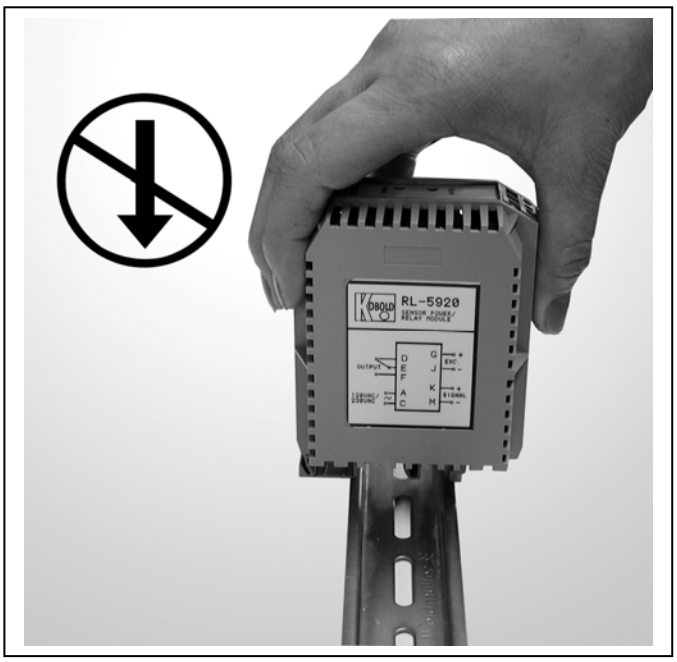

Figure 1

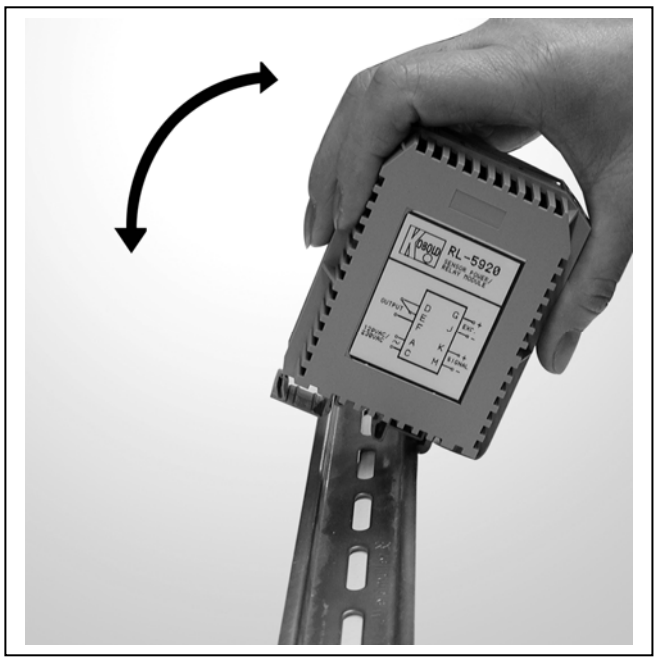

Figure 2

INCORRECT: Unit snapped on vertically angle

CORRECT: Unit snapped on at an

8. Electrical Connection

8.1 Electrical Standards

RL-61xx isolation relay modules are built according to UL and CSA standards.

They are not UL or CSA approved.

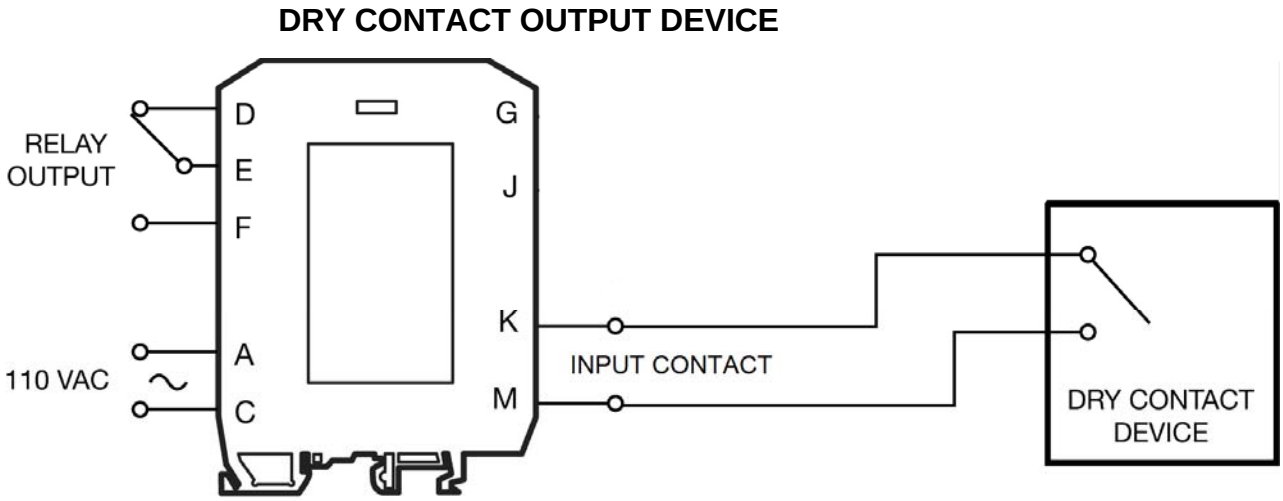

Figure 3

9. Maintenance

The performance characteristics of the devices remain stable, even over long periods of time, thus eliminating any need for adjustments. Therefore, maintenance is not required.

No changes may be made to devices. Repairs to devices must only be carried out by specially trained and qualified personnel

10. Order code

Supply Voltage	PART NUMBER
	Isolation Relay
110 VAC	RL-6101
230 VAC	RL-6102
24 VDC	RL-6103

11. Technical Information

Input:	Dry contact
Supply Voltage:	110 VAC, 230 VAC, 24 VDC
Output:	SPDT Relay, 10A @ 240 VAC, 8A @ 24 VDC
Indicators:	LED Green – Power ON LED Red – Relay energized
Housing:	Molded Polyamide, NEMA 1/IP 20, 35mm DIN RAIL mountable
Temperature:	0 °F to 130 °F
Humidity:	0 to 95 %RH, Non-condensing
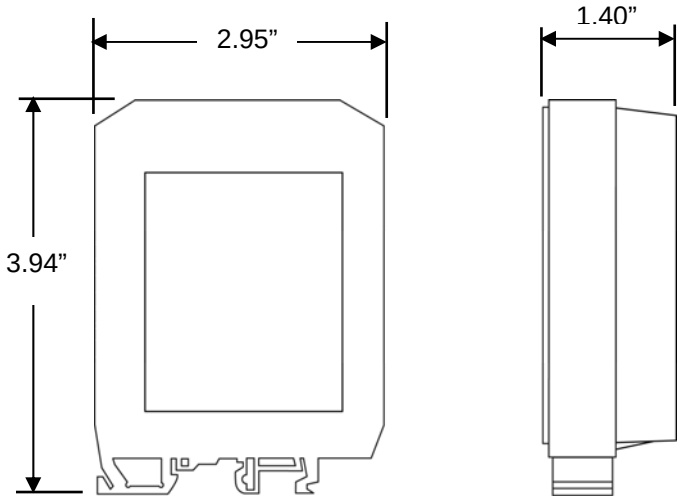
12. Dimensions