Operating Instructions

for

Low Volume Rotating Vane

Flow Meter

Model: DPL-1P...

DPL-1V...

DPL-1E...

1. Contents

Manufactured and sold by: KOBOLD Instruments Inc.
1801 Parkway View Drive
Pittsburgh PA 15205-1422
Tel.: 412-788-2830
Fax: 412-788-4980
E-Mail: info@koboldusa.com
Internet: www.koboldusa.com

2. Note

Please read these operating instructions before unpacking and putting the unit into operation. Follow the instructions precisely as described herein.
The devices are only to be used, maintained and serviced by persons familiar with these operating instructions and in accordance with local regulations applying to Health & Safety and prevention of accidents.

When used in machines, the measuring unit should be used only when the machines fulfil the EC-machine guidelines.

PED 2014/68/EU
In acc. with Article 4 Paragraph (3), "Sound Engineering Practice", of the PED 2014/68/EU no CE mark.
Diagram 8, Pipe, Group 1 dangerous fluids

3. Instrument Inspection

Instruments are inspected before shipping and sent out in perfect condition.
Should damage to a device be visible, we recommend a thorough inspection of the delivery packaging. In case of damage, please inform your parcel service / forwarding agent immediately, since they are responsible for damages during transit.

Scope of delivery:
The standard delivery includes:

- Low Volume Rotating Vane Flow Meter model: DPL
- Operating Instructions

3. Regulation Use

Any use of the DPL which exceeds the manufacturer’s specification may invalidate its warranty. Therefore, any resulting damage is not the responsibility of the manufacturer. The user assumes all risk for such usage.

4. Operating Principle

The KOBOLD DPL flow meters are used to measure and monitor liquids. Its compact design allows it to be used in equipment where only small space is available. The large number of evaluating electronics offered means that the system is suited for a wide range of applications.

The media flows through a specially shaped flow housing and causes a vane to rotate. This rotary motion is sensed by opto-electronics in a non-contacting manner, and converted to an asymmetric frequency signal or an analogue signal. A frequency divider with symmetrical output is available as an option. The frequency is proportional to the flow velocity. The vane has a sapphire bearing and ensures a high degree of linearity and long service life.

6. Mechanical Connection

6.1. Check of operating conditions

- flow rate
- maximum operating pressure
- maximum operating temperature

Note! Exceeding the measuring range can cause damage to the axle bearings, resulting in significant errors in measurement.

6.2. Mounting

- Flow in direction of the arrow (universal positioning).
- Avoid high pressure or tensile/torsion loads on the connection joints.
  Fasten inlet and outlet pipe mechanically at a distance of approx. 50 mm from the connection joint.
- Check the connections for leaks.
- We recommend a minimum inlet straight run of 5x Diameters and a minimum outlet straight run of 2x Diameters.

7. Electrical Connection

7.1. General

Attention! Make sure that the voltage values of your system correspond with the voltage values of the measuring unit.

- Make sure that the supply wires are de-energised before making any connections.

Attention! Incorrect wiring will lead to damage of the unit's electronics.

7.2. DPL...0000 (frequency output, OEM without cable)

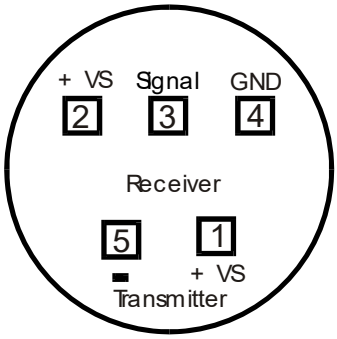

Feed voltage receiver	4,5 ... 16 V_{DC}
Feed current receiver	typ. 7 mA
Signal amplitude High	approx. operating voltage
Signal amplitude Low	0,2 V
Reverse voltage Sender	3,0 V max.
Feed current Sender	8 mA - 12 mA
Output dissipation (power)	2,5 mW max.

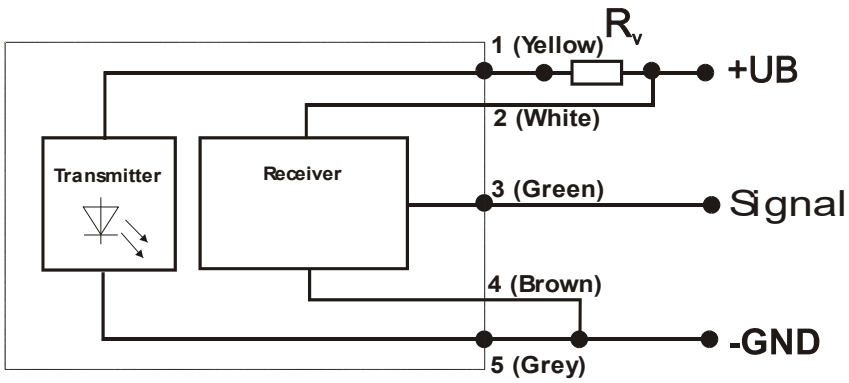

V_S	R_V*
5 V	470 Ω / 0,25 W
8 V	820 Ω / 0,25 W
12 V	1300 Ω / 0,25 W

*Not included in delivery

7.3. Evaluating electronic: Frequency output

Plug connection M12x1 (...F3..)

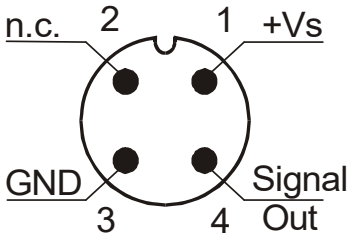

Cable connection (...F5..)

brown:	$+V_S$
blue:	GND
black	Signal

7.4. Evaluating electronic: Analogue output (..L..)

3-wire, connector M12x1 (DPL-..L303,..L343)

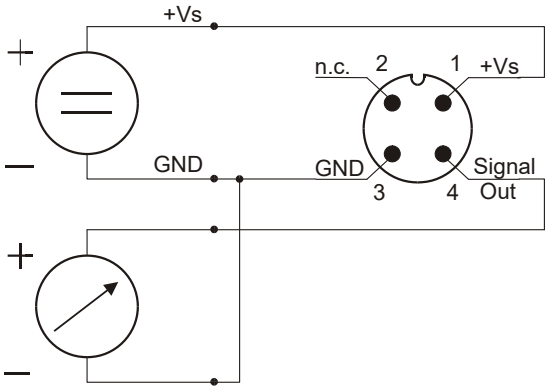

3-wire, DIN-plug 43650 (DPL-...L403;...L443)

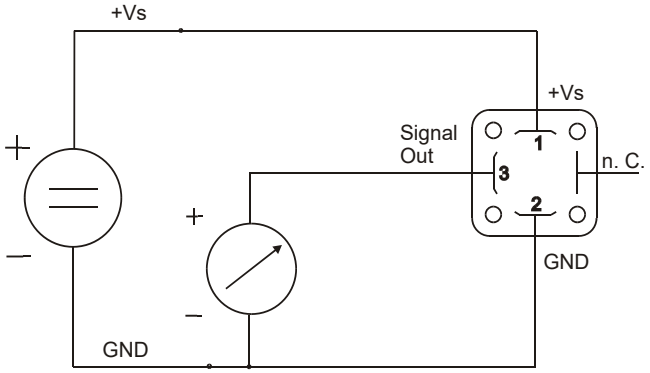

7.5. Cable outlet with M12x1 angle plug electronic options F3x and L3x

When using a pre-assembled M12x1 connection cable with angled plug, the cable outlet is always aligned opposite to the flow direction.

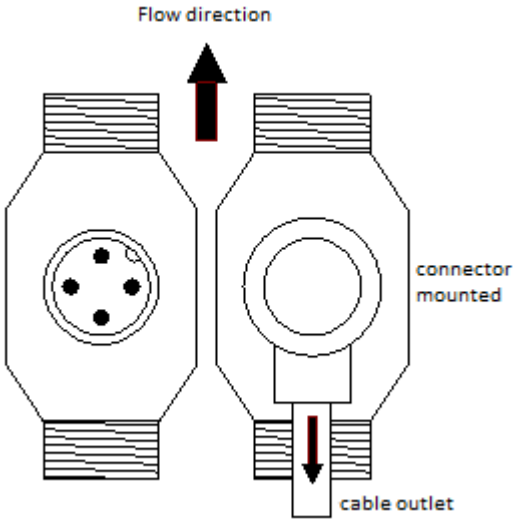

7.6. Compact electronics: (..C30R, ..C30M, ..C34P, ..C34N)

See Operating Instructions Completion for compact electronics with frequency output
Model: ..C30R,..C30M,...C34P,...C34N

8. Commissioning – Evaluating Electronic

8.1. Frequency output

The measuring instruments are preset and after connection ready for operation.

8.2. Analogue output

The measuring instruments are preset and after connection ready for operation.

8.3. Compact electronics

The measuring instruments are preset and after connection ready for operation. (In order to change settings see the operating instructions for the compact electronics model ..C30R, ..C30M, ..C34P, ..C34N)

9. Maintenance

As long as the measured media is clean, the instrument is maintenance-free. In order to avoid problems, we recommend the installation of a filter, e.g. the magnetic filter, model MFR.
If cleaning of the sensor is necessary, the sensor can be opened, so that the inner parts are accessible. Take care that the sensor and especially the vane are not damaged; make sure that the mounting position and the mounting direction of the vane is correct. All work on the sensor electronics should be done only by the manufacturer; otherwise, the guarantee will become invalid.

9. Technical Information

9.1. Sensor data

Accuracy:	± 2.5 % f. s.
	± 5 % f. s. (OEM version)
Linearity:	± 1 % f.s.
Media temperature:	- 40...+ 70 °C
Ambient temperature:	- 30...+ 60 °C
Max. operating pressure:	10 bar
Protection type.:	IP 65

Materials

Housing:	polypropylene
Rotating Vane:	polypropylene
Axle/bearing:	sapphire
Vane mount:	polysulfone
Gasket:	NBR, FPM or EPDM

9.2. Evaluating electronic

Frequency output (OEM-model), no CE-mark

Power supply:	4.5 – 12 V_{DC}
Supply current:	approx. 7 mA
Signal amplitude high:	approx. power supply
Signal amplitude low:	≤ 0.2 V
Transmitter cut-off voltage:	3 V max.
Transmitter supply current:	15 mA .. 25 mA
Output loss:	max. 2.5 mW
Electrical connection:	solder pins
Pulse output:	NPN, open collector, max. 10 mA

Frequency output (option frequency divider)

Supply voltage:	24 V_{DC} ± 20%
Supply current:	40 - 50 mA
Signal amplitude high:	approx. power supply
Signal amplitude low:	≤ 0.2 V
Output loss:	max. 2.5 mW
Electrical connection:	plug connector M12x1 (option: 2 m PVC cable)
Division ratio (option):	1…1/128, factory-set
Pulse output:	PNP, open collector, max. 20 mA

Analogue output (option plug-on display)

Power supply:	24 V_{DC} ± 20 %
Output:	0 - 20 mA or 4 - 20 mA, 3-wire technology
Max. load:	500 Ohm
Electrical connection:	plug connector M12x1 or DIN 43 650
Option:	plug-on display (with plug connector DIN 43 650 and output 4-20mA)

Compact electronics

Display:	3-digit LED
Analogue output:	(0)4...20 mA adjustable, max. 500 Ω
Switching outputs:	1 (2) semiconductor PNP or NPN, set at the factory
Contact operation:	N/C / N/O contact programmable
Setting:	via 2 buttons
Power supply:	24 V_{DC} ± 20 %, 3-wire technology, approx. 100 mA
Electrical connection:	plug connector M12x1

11. Order Codes

Order Details (Example: **DPL-1PU1 G4 K000**)

Range (GPH)	Nominal Frequency at Max. Flow (Hz)	Max. Diff. Pressure (PSI)	Model / Gasket Material			Connection	Electronics
			NBR	FKM	EPDM		
0.4...8.0	272	11	**DPL-1PU1..**	**DPL-1VU1..**	**DPL-1EU1..**	**..G4..** = G 1/2 Male **..S4..** = Hose Barbs, 1/2" PVC	**..K000** = Frequency Output, NPN, w 5' Cable (OEM), no CE-mark **..F300** = Frequency Output, Plug M12x1, PNP **..L343** = 4-20 mA Output, M12x1 Plug **..L443** = 4-20 mA Output, DIN 43 650 Plug **..C30R*** = LED Display, 2X Open Collector, PNP, Plug M12x1 **..C34P*** = LED Display, 4- Collector, PNP, Plug M12x1
0.8...28	471	11	**DPL-1PU2..**	**DPL-1VU2..**	**DPL-1EU2..**		
3.0...95	505	10	**DPL-1PU3..**	**DPL-1VU3..**	**DPL-1EU3..**		
6.0...190	265	15	**DPL-1PU4..**	**DPL-1VU4..**	**DPL-1EU4..**		
16...400	399	19	**DPL-1PU5..**	**DPL-1VU5..**	**DPL-1EU5..**		

Accessories: Part Number **807.037** = Mating 4 pin Micro-DC connector with 6 ft. cable for output ..F300 & ..L343
Part Number **807.007** = Mating 5 pin Micro-DC connector with 6 ft. cable for output ..C34P, & ..C30R

Plug-On Display: for Model DPL-..L443 (4-20 mA Output, DIN Plug Connector)

Description	Model Number
4-Digit LED, Plug Connector DIN 43 650, 3-wire, Power Supply Via Analog Output	**AUF-3000**

Electrical Connection

DPL-..K000

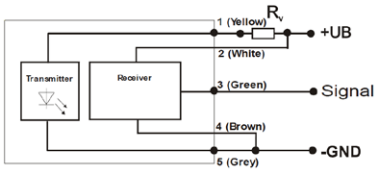

DPL-..L343, ..F300

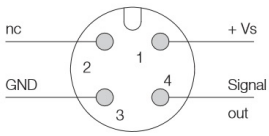

DPL-..C3xx

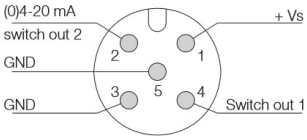

DPL-..L443

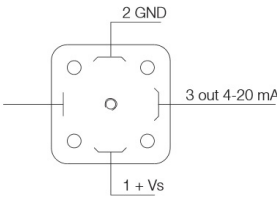

11. Dimensions

DPL-...0000

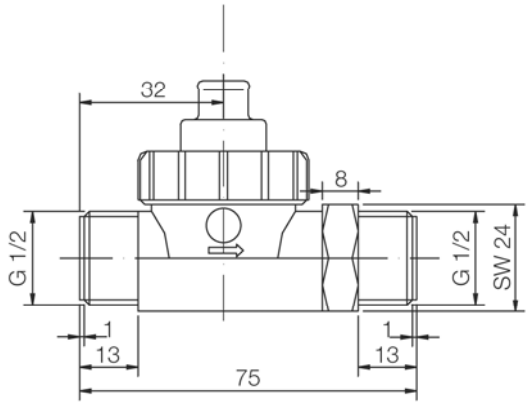

DPL-...F3...; DPL-...L3...

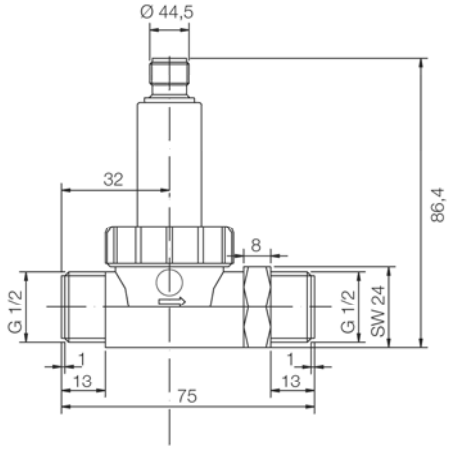

DPL-...C3 with compact electronic

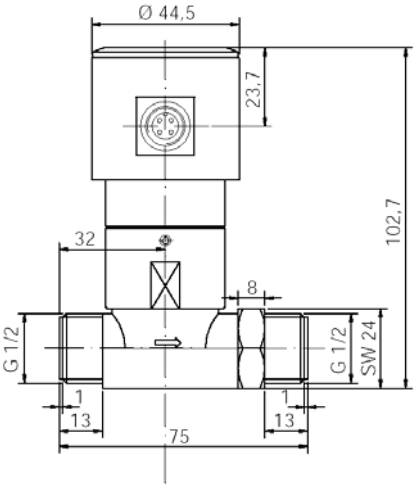

DPL-..L4 with analogue output and plug-on display

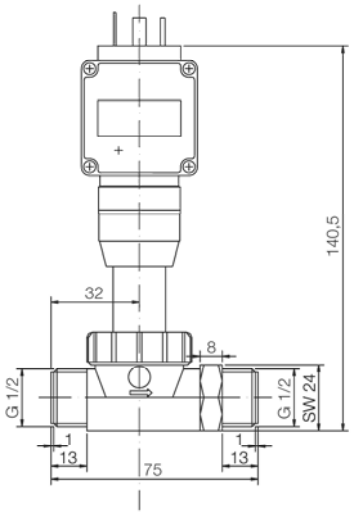

12. EU Declaration of Conformance

We, Kobold Messring GmbH, Hofheim-Ts, Germany, declare under our sole responsibility that the product:

Low Volume Rotating Vane Flow Meter
model: DPL-1P..., DPL-1V..., DPL-1E...

to which this declaration relates is in conformity with the standards noted below:

EN 61000-6-4:2011
Electromagnetic compatibility (EMC) - Part 6-4: Generic standards - Emission standard for industrial environments

EN 61000-6-2:2006
Electromagnetic compatibility (EMC) - Part 6-2: Generic standards - Immunity for industrial environments

EN 61010-1:2011
Safety requirements for electrical equipment for measurement, control and laboratory use - Part 1: General requirements

EN 60529:2014
Degrees of protection provided by enclosures (IP Code)

EN 50581:2012
Technical documentation for the assessment of electrical and electronic products with respect to the restriction of hazardous substances

Also the following EC guidelines are fulfilled:

2014/30/EU	**EMC Directive**
2014/35/EU	**Low Voltage Directive**
2011/65/EU	**RoHS** (category 9)
2015/863/EU	Delegated Directive (RoHS III)

Hofheim, 06 Aug. 2019

H. Peters	M. Wenzel
General Manager	Proxy Holder