Operating Instructions

for

Magnetic Inductive Flowmeter

Model: PITe + U-PACE

We don't accept warranty and liability claims neither upon this publication nor in case of improper treatment of the described products.

The document may contain technical inaccuracies and typographical errors. The content will be revised on a regular basis. These changes will be implemented in later versions. The described products can be improved and changed at any time without prior notice.
© Copyright
All rights reserved.

1. Contents

1. Contents 2
2. Note 4
   2.1 General 4
   2.2 Hazard warnings 4
   2.3 As per PED 2014/68/EU 5
   2.4 Overview of the device functionality 5
3. Instrument Inspection 5
4. Intended Use 6
5. Environment 7
6. Operating principle 8
   6.1 General 8
   6.2 Minimum electrical conductivity / Gas bubbles 8
   6.3 Deposits 9
   6.4 Measuring electrodes 9
7. Mechanical connection 10
   7.1 Check operating conditions 10
   7.2 Installation 10
8. Electrical Connection 15
   8.1 General 15
   8.2 Pin assignment 16
   8.3 Connection example outputs: 21
9. Operation and menu structure 22
10. Status 24
11. IO-Link function 25
   11.1 Specification 25
12. Technical Information 26
13. Order Codes 26
14. Dimensions 26
15. Disposal 26
16. Appendix 27
17. Manufacturer's declaration 29
18. EU Declaration of Conformance 31

Manufactured and sold by:

Kobold Messring GmbH
Nordring 22-24
65719 Hofheim
Tel.: +49(0)6192-2990
Fax: +49(0)6192-23398
E-Mail: info.de@kobold.com
Internet: www.kobold.com

2. Note

2.1 General

Before unpacking and commissioning the device, the operating instructions and the “General Safety Instructions” document must be read and followed carefully. The general safety instructions, the operating instructions, the data sheet as well as approvals and further information can be downloaded via the QR code on the device or under the respective product on www.kobold.com.

Due to technical changes, the device documentation available online may not always correspond to the product version you have purchased. If you need an instruction manual that corresponds to the purchased product version, you can request it from us free of charge by email (info.de@kobold.com) in PDF format, specifying the relevant invoice number and serial number. If you wish, the operating instructions can also be sent to you by post in paper form.

Operating instructions, data sheet, approvals and further information via the QR code on the device or via www.kobold.com

The devices are only to be used, maintained and serviced by persons familiar with these operating instructions and in accordance with local regulations applying to Health & Safety and prevention of accidents.

When used in machines, the device should be used only when the entire machine fulfils the EU machinery directive.

2.2 Hazard warnings

The following instructions are intended to ensure your personal safety and to prevent damage to the product described or connected devices. Safety instructions and warnings to prevent danger to the life and health of users or maintenance personnel, or to prevent damage to property, are highlighted in this documentation using the symbols defined here. *The symbols and terms used have the following meaning in the documentation itself:*

Symbol	Explanation	Symbol	Explanation
Note	Is important information about the product, the handling of the product or the respective part of the documentation to which particular attention should be drawn.	Caution	Means that minor personal injury or minor property damage may occur if proper precautions are not taken.

Symbol	Explanation	Symbol	Explanation
Warning	Indicates that serious personal injury or substantial property damage may occur if proper precautions are not taken.	Danger	Means that death can occur if proper precautions are not taken.
Warning	Attention: Hot surface!	Warning	Warning: Dangerous electrical voltage

2.3 As per PED 2014/68/EU

In acc. with Article 4 Paragraph (3), "Sound Engineering Practice", of the PED 2014/68/EU no CE mark.
Diagram 8, Pipe, Group 1 dangerous fluids

2.4 Overview of the device functionality

Note	Depending on the installed device firmware, the MIM device may have different functionalities. The functional extensions are shown in the following table.

The installed software version is displayed after starting the device below the manufacturer logo in the form REVxxxxxx for approx. 2 sec.

3. Instrument Inspection

Instruments are inspected before shipping and sent out in perfect condition.
Should damage to a device be visible, we recommend a thorough inspection of the delivery packaging. In case of damage, please inform your parcel service / forwarding agent immediately, since they are responsible for damages during transit.

Scope of delivery:
The standard delivery includes:

- Electromagnetic Flowmeter in metal design model: PITe + U-PACE

4. Intended Use

Flawless operation of the device can only be guaranteed if all aspects in these operating instructions are adhered to.
The manufacturer assumes no responsibility for any damage resulting from improper use. The user assumes all responsibility for such usage.

Our products are designed exclusively for industrial use. Depending on the design, they can also measure potentially explosive, flammable, toxic and oxidizing substances.
The product should only be used for the media approved in the associated documentation. The resistance of the wetted parts should be checked before first use. The functional compatibility of the medium used with the product's measuring system should also be checked before first use.
The specified pressure and temperature range must always be observed.
The product must be permanently protected against corrosion caused by environmental influences. The general conditions listed on the nameplate, operating instructions and additional documentation must be permanently observed both when operating and storing the product. The information on the nameplate always takes precedence.
If the product documentation does not contain a separate specification of the environmental conditions, the values according to DIN EN 61010-1 must be used. In particular, the following must be observed:

- Altitude up to 2000 m
- Ambient temperature between 5 °C and 40 °C
- Pollution degree 2

<u>In addition to the above, the following applies to devices with a mains voltage supply:</u>

- Fluctuations in the mains supply voltage up to 10 % of the nominal voltage;
- Overvoltage category II

The PITe flowmeter is a plug-in sensor and was specially developed for the measurement, display and transmission of flow rates of conductive liquids. The instrument has a graphic TFT display, rotatable in 90 ° steps and can display flow rate, daily volume counter (resettable) and total volume counter in the units of measurement selected by the operator. A clear menu guides the user through the parameterization of the device, which largely eliminates the need to look into the operating instructions.
Flawless operation of the device can only be guaranteed if all aspects in these operating instructions are adhered to.
The manufacturer assumes no responsibility for any damage resulting from improper use. The user assumes all responsibility for such usage.

5. Environment

The U-PACE transmitter unit is weatherproof and meets IP67 protection class, while the plug-in sensor itself meets IP65 protection class. The meter is designed for industrial environments and complies with Directive 2014/30/EU (Electromagnetic Compatibility).

The device is intended for indoor use (relative humidity <100 %, use at up to 2000 m above sea level).

To avoid moisture in the device from condensation, a pressure compensation membrane is integrated on the front.
This membrane must not be pierced.

6. Operating principle

6.1 General

The KOBOLD Flowmeter PITe with U-PACE is designed to measure and monitor medium and large flows of conductive fluids in piping.
The device works on the magnetic-inductive measuring principle. According to Faraday's law of induction, a voltage is induced in a conductor moving in a magnetic field. The electrically conductive measuring medium corresponds to the moving conductor in the process. The voltage induced by the measuring medium is proportional to the flow rate and thus a measure of the volume throughput. Prerequisite is a minimum electrical conductivity of the flowing medium. The induced voltage is fed to a measuring amplifier via two electrodes, which are in conductive contact with the medium. The volume flow is calculated using the pipe diameter specified by the customer.
The measurement is independent of the medium and its physical properties such as density, viscosity and temperature. The device can be configured via the display. There are two outputs available, which can each be configured as alarm, frequency, pulse, voltage, and current outputs.
The device also provides a dosing function. The dosing function can be activated in measuring mode via the four buttons. The dosing function controls simple filling tasks and also measures flow rate and partial amount.

6.2 Minimum electrical conductivity / Gas bubbles

For the correct function of the instrument, it is necessary that the flow channel is always completely filled with medium. From a minimum electrical conductivity of 20 µS/cm, the PITe + U-PACE operates within the specified error limits. The conductivity of the medium is constantly monitored by the device electronics. If the electronics detects that the minimum conductivity has fallen below min. value, this is signaled by displaying the error message 'Empty pipe' and the flow rate reading is set to '0'. Air bubbles in the flowing medium or media with varying conductivity in the range of the minimum conductivity can disturb the measuring function and reduce the measuring accuracy of the PITe + U-PACE. Gases contained in the liquid are also measured as a flow volume and lead to measurement errors. If necessary, install appropriate vents in the flow of the unit.

6.3 Deposits

Minor deposits on the pipe system or plug-in sensor significantly impair measurement accuracy, as they alter the internal pipe diameter stored in the device. For liquids that tend to form deposits, the pipe system and plug-in sensor should be checked regularly and cleaned if necessary.

Warning	Deposits in the pipe system reduce the accuracy of the flow meter. The pipe system must be cleaned regularly.

6.4 Measuring electrodes

The PIT-e uses a plug-in sensor with a galvanic tap. It is in direct contact with the medium. The plug-in sensor is made of stainless steel 1.4404.
In rare cases (e.g., due to oil or grease in the medium), electrically insulating deposits on the plug-in sensor cannot be ruled out. This could result in inaccurate measurements.
In such cases, the plug-in sensor must be cleaned with a soft brush and a grease solvent.

7. Mechanical connection

Before installation:

- Remove all transport bolts and ensure that no packaging parts are left in the device.
- Ensure that the maximum permissible operating pressures and temperatures of the device are not exceeded (see Technical Data).
- Install the flowmeter in the pipeline without stress.
- Protect the measuring tube from external damage.
- Avoid pressure surges in the measuring tube, e.g., by quickly shutting off the flow.
- Contact-type devices must not be installed within an induction field.
- If possible, check the tightness of the connection between the screw connection and the pipe (see chapter Commissioning) immediately after the mechanical installation.

7.1 Check operating conditions

- flow rate
- max. operating pressure
- max. operating temperature

In general, PITe + U-PACE is subjected to the same loads as the piping into which it is installed. Therefore, the plug-in sensor and the display unit must be kept away from extreme loads, e.g. pressure surges with strong dynamic pipe movements, vibrations in the vicinity of centrifugal pumps, high medium temperatures, flooding, etc.

7.2 Installation

- Remove all packing materials and transport retainers and ensure that no such materials remain in the device.
- Avoid pressure and tensile load.
- Straight runs: 10xD inlet, 5xD outlet
- Mechanically secure the inlet and outlet pipe at a distance of 50 mm from the connections.
- Avoid valves or large reduction on the inlet section (this increases the inaccuracy of measurements).
- Check the leak tightness of the connections.

7.2.1 Cable Routing

- Remove the cable ties
- Lay the cable without loops
- Prefer a fixed cable routing
- Minimum bending radius
    - Loose routing: 95 mm
    - Fixed routing: 48 mm

7.2.2 Horizontal pipeline routing

Where possible install the sensor in slightly ascending pipes. This practice will minimise the possibilities of air pockets or drainage of the installation pipe.

In the top section of the pipe, air pockets may accumulate around the sensor head causing large fluctuations in the measurement. In declining sections of the pipeline, pipes may drain, also generating errors in the measurement.

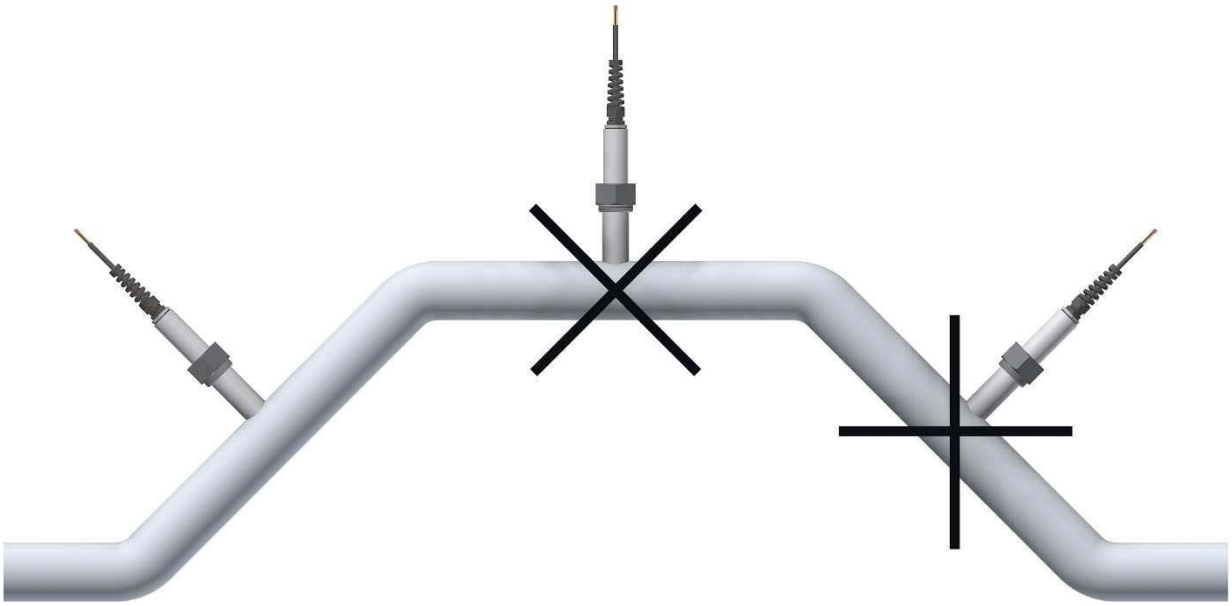

7.2.2.1 Open inlet or outlet

When installed at an inlet or an outlet, the device should be installed, where possible, in a siphon. This will ensure that the pipe section fitted with the sensor cannot autonomously drain. The empty pipe detection circuit of the transmitter is an additional safety feature for recognizing empty or partially filled pipes.

Caution! There is the danger of accumulation of solids in the vacinity of a siphon. The installation of a cleaning aperture in the pipe is therefore advisable.

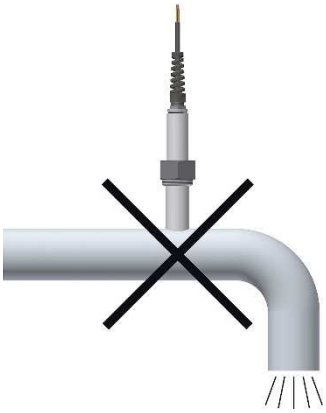

7.2.2.2 Down pipes

When down pipes are present in the pipe system, a siphon or a ventilation valve should be positioned after the sensor. By these means, negative pressure can be avoided in the pipeline, preventing a breakdown of the flow thus reducing the risk of air inclusions in the measurement medium.

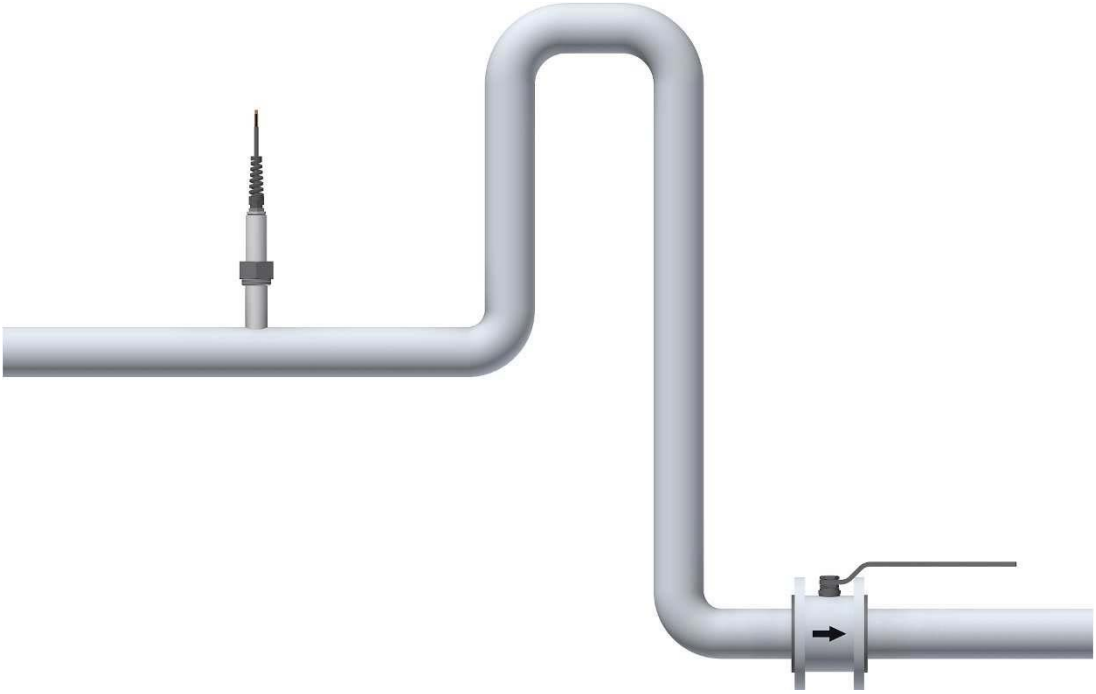

7.2.2.3 Long pipelines

In long pipelines, there is always a danger of pressure surges. Therefore, disturbing elements such as regulating and shut-off devices should be arranged downstream from the sensor. However, when installed in vertical piping, especially when operating at high temperatures, the regulating and shut-off devices should be placed in front of the sensor (danger of vacuum).

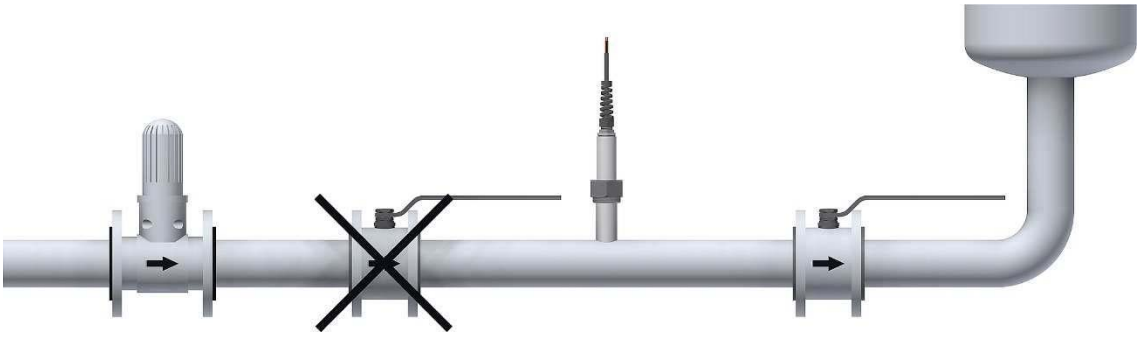

If this is impractical, flow conditioners must be installed so that no vortexes can reach the pipe section of the sensor. The mounting location in the pipe system should be selected so that the installation pipe with the sensor is continually filled with the medium. This requirement can be met by using drains and check valves.

7.2.2.4 Installation of pumps

To avoid negative pressure and eventual damage to the sensor head, never install PITe flowmeters on the suction side of pumps.

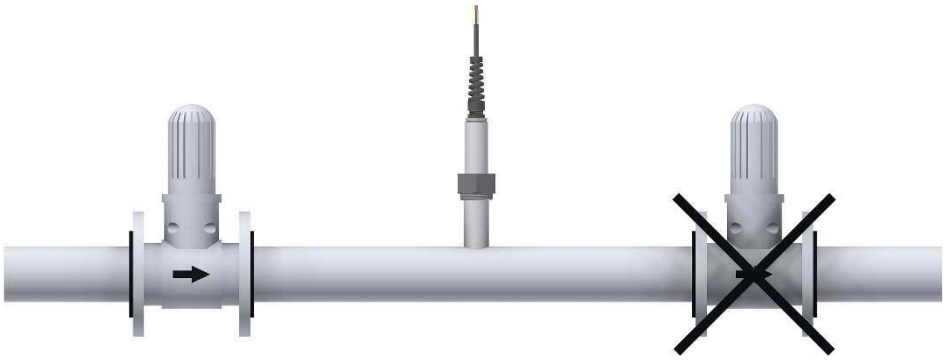

If necessary, arrange for pulsation dampeners when using piston, diaphragm or hose pumps.

7.2.2.5 Preferred mounting position

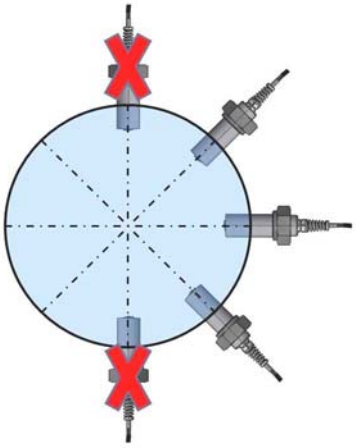

To avoid possible sources of error, the mounting position of the sensor should be carefully chosen.

The ideal angle of installation should lie between 45° and 135°.

When Installed at the top of the pipe (0 °C), gas bubbles may gather around the sensor head causing large fluctuations in the measurement signals, whereas sensors installed at the bottom of a pipe (180 °C) may be affected by sediment deposed in the pipe.

7.2.3 Immersion depth of PITe-*** in the pipe

The weld spigots must be installed so that the sensor head projects 40 mm into the pipeline, regardless of the pipe's nominal diameter.

Caution: Before welding the socket to the pipe, it is essential that the sensor be removed from the welding socket!

NOTE Note	Attention: Before welding the socket to the pipeline, the sensor must be removed from the welding socket!

7.2.3.1 Installing the threaded version

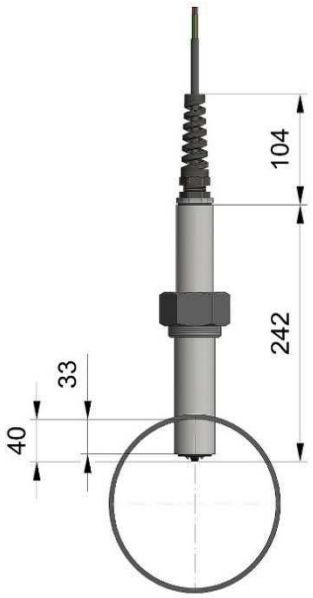

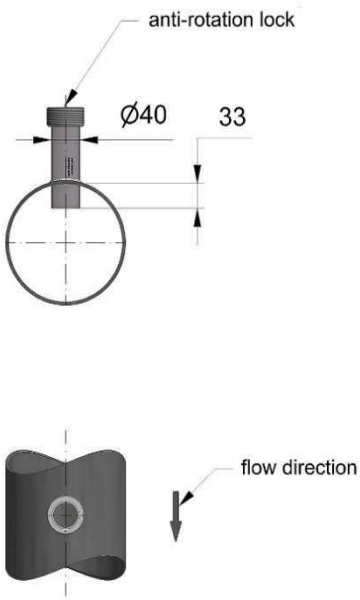

8. Electrical Connection

8.1 General

NOTE Note	Attention! Make sure that the voltage values of your system correspond with the voltage values of the measuring unit.

- Make sure that the supply wires are de-energised.
- Connect the supply voltage and the output signal to the plug PINs as stated below.
- We recommend the use of wires with cross sectional area of min. 0.25 mm².

NOTE Note	Attention! The measuring electrodes are galvanically connected with the reference potential of the supply voltage and the signal output.

8.1.1 Grounding/ Earthing

The sound grounding concept of the flowmeter is a necessity for both safety reasons as well as to ensure a faultless operation. In accordance with VDE 0100 Part 410 and VDE 0100 Part 540 the grounding connections must be at protective conductor potential. **For metrological reasons, this potential must be identical to the potential of the fluid**. The grounding cable should not transmit any interference voltage. For this reason, do not simultaneously ground other electrical devices with this cable.

The measuring signal tapped at the electrodes amounts to only a few millivolts. Correct grounding of the electromagnetic flow sensor is therefore essential for achieving exact measurement. The transmitter requires a reference potential to evaluate the measured voltage on the electrodes. The metrological grounding of the medium for PITe is achieved via the wetted part of the sensor tube.

The housing of the display electronics must be grounded via the threaded hole (M4) on the side. **If a Class 2 switching power supply (fully insulated, without an external protective conductor connection) is used for the power supply, grounding must be connected to ensure proper operation.** For proper installation, an M4 screw (max. thread length 8 mm), a matching washer, a ring terminal, and a toothed washer are required.

These mechanical parts are not part of the delivery.

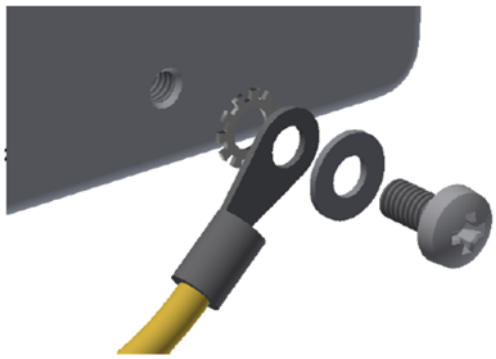

8.2 Pin assignment

8.2.1 External connection with electrical connector M12x1 4-pin

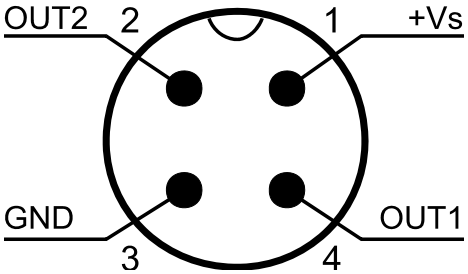

8.2.2 Connection plug-in sensor

The on-site installation may require dismantling the cable and reconnecting it later.

Note	Note: In principle, the cable can be shortened by the user on the transmitter side and connected to the transmitter again after appropriate assembly. **Please note that the maximum cable length of 20 m is not exceeded.**

Caution	A customer extension of the connection cable is not recommended because of the necessary continuous shielding and leads to malfunction of the device. The cable permanently connected to the sensor must not be disassembled.

Caution	Attention! Only sensors and transmitters with an identical serial number may be operated together, because the factory calibration is only valid in this case. If sensors and transmitters with different serial numbers are operated together, this will lead to incorrect flow measurement values.

Transmitter connection diagram

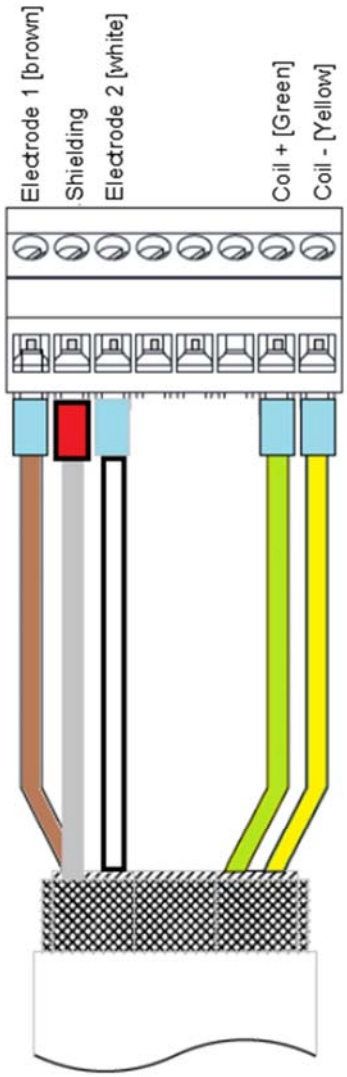

Assembly of connection cables

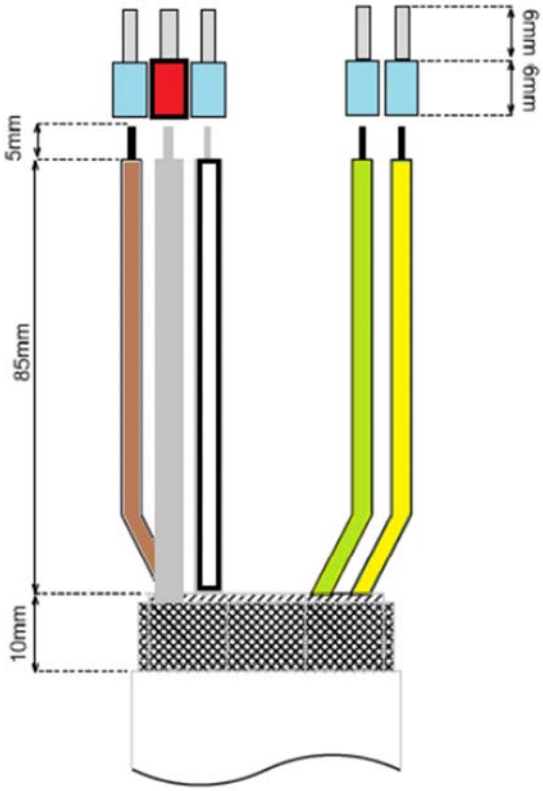

Insert pre-assembled cable through the cable gland and connect to the connector strip. Reattach the cable lugs to the housing using the washers and nuts provided during delivery.

Transmitter connection diagram

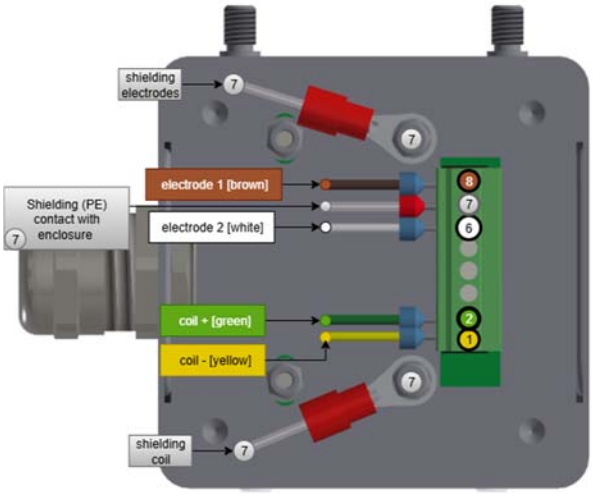

PITe cable connection

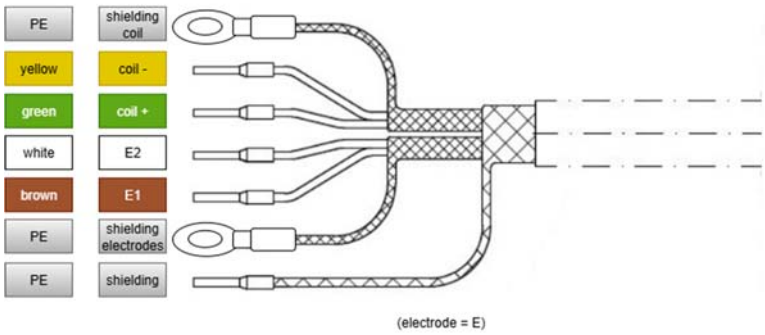

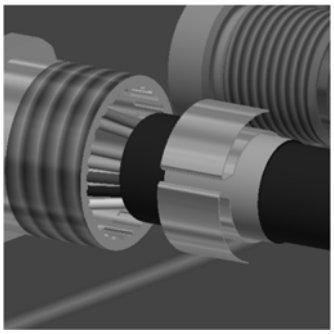

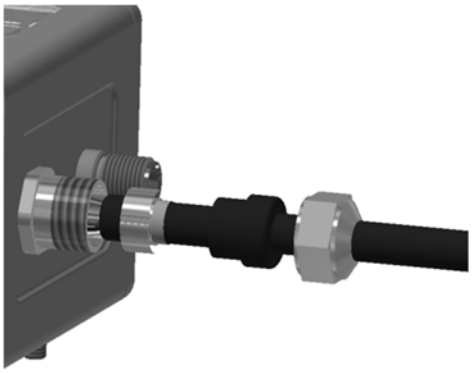

Pull back the cable and put the contact spring on the outer shield

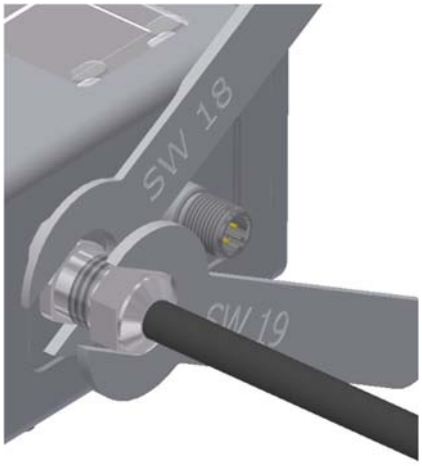

Push the cable into the cable gland, insert the plug connector and tighten the hexagon nut of the cable gland with SK key SW 19 and lock with SW 18

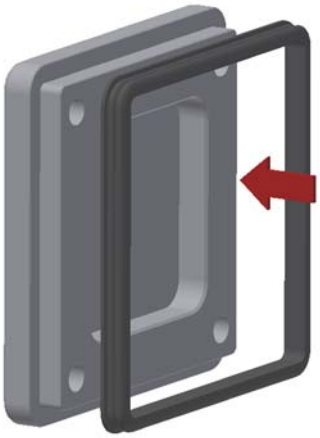

Insert gasket, make sure gasket is seated correctly

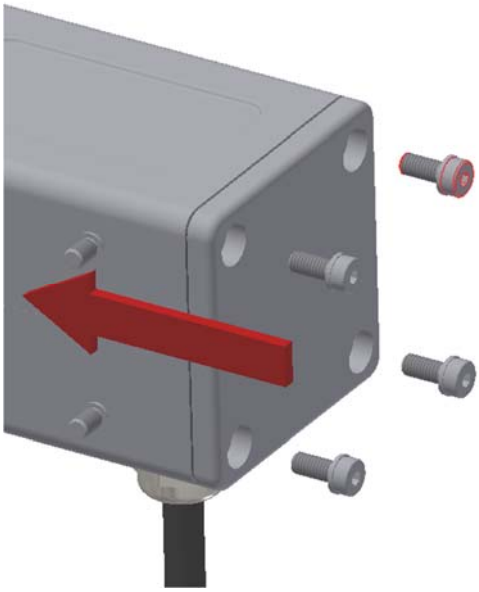

Put the laminated seal disc on the screw and screw the threaded connection in the housing.
When tightening the screws, reduce the gap between sheet metal housing and the cover to ~ 0.5 mm

8.3 Connection example outputs:

OUT2: analogue output 4-20 mA
OUT1: analogue output 0-10 V

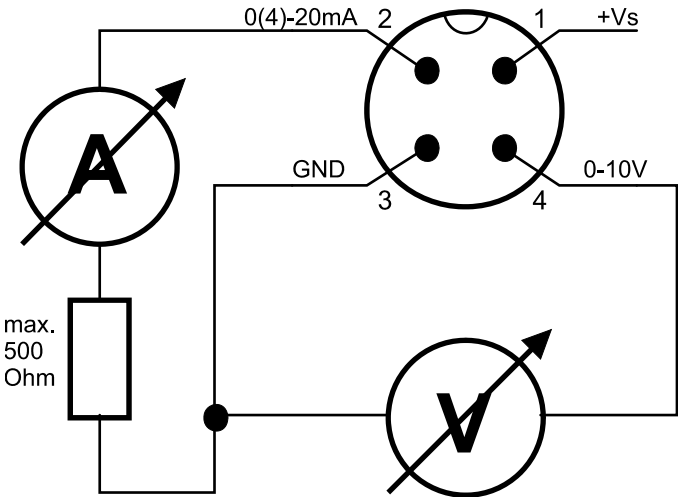

Configurable output functions:

Out 1	Out 2
analogue output 4-20 mA	analogue output 4-20 mA
analogue output 0-20 mA	analogue output 0-20 mA
analogue output 2-10 V	analogue output 2-10 V
analogue output 0-10 V	analogue output 0-10 V
alarm output	alarm output
pulse output	pulse output
frequency output	frequency output
communication mode KofiCom	
communication mode IO Link	
control input	
control input dosing function	dosing output

9. Operation and menu structure

See "Operating Instructions Supplement for U-PACE Electronics"

Please note: The PITe does NOT have a temperature sensor!

Changing the factory-programmed pipe inner diameter via the user unit:

The PITe + U-PACE is factory-programmed to a preset pipe inner diameter. You can read this in the display name when the device starts up or access it via the display's info menu. The value in the device name is given in mm (nominal diameter variant "D") or inches (nominal diameter variant "A").

To use the full functionality of the PITe + U-PACE, you must order a device that has been factory-programmed to match your pipe inner diameter. If this is not possible, order a device with a larger pipe inner diameter than your pipe to minimize the limitations caused by using the user unit.

If you want to change the factory-set pipe inner diameter, please note that you must accept the following restrictions:

- You must adjust the cutoff in the U-PACE to your new lower measuring range.
- You must adjust your analog outputs for voltage and current in the U-PACE.
- You must adjust your frequency output in the U-PACE.
- The overflow function no longer works correctly:
  - The display color changes at the wrong flow value - see example below.
  - IO-Link displays the error message "Overflow" at the wrong flow value - see example below.

If you configure your device to a larger pipe inner diameter than the factory-set via the user unit, you will also not be able to set your outputs to a larger maximum flow rate – see example below.

Example 1: Your pipe inner diameter is larger than the inner diameter stored in the device

The following values have been saved in your device at the factory:

Start of measuring range: 1 m/s
End of measuring range: 10 m/s

Due to your larger inner pipe diameter, more medium will flow through your pipe at 10 m/s, so your maximum flow rate at 10 m/s will be higher than what is saved in the device. Likewise, at 1 m/s more medium will flow through your pipe, your minimum flow will also be higher than saved in the device.

Example values:	Device code	Inner diameter	Minimal flow 1 m/s	Maximum flow 10m/s	Cutoff UPACE
You have ordered:	A1H	4.026 inch	12.1 galUS/h	121 galUS/h	12.1 galUS/h
Your pipe has:	Axx	4.2 inch	13.2 galUS/h	132 galUS/h	13.2 galUS/h

Your device is preset to the following outputs:

Output:	Value [galUS/h]
0 mA	0
4 mA	0
20 mA	121
0 V	0
2 V	0
10 V	121
0 Hz	0
max. Hz	121

You now want to have 20mA at 10m/s on Output 1:

This setting is not possible.

You do not want to see any values below the start of your measuring range:

Cutoff is to be increased from 12.1 galUS/h to 13.2 galUS/h

You have connected your device via IO-Link and want to use the overflow status:

Your device returns the status "Overflow" at a flow rate of 10 % above the end of the measuring range

Overflow status is set at: 121 galUS/h*1.10 = 133.1 galUS/h
Overflow status would be correct at:
132 galUS/h*1.10 = 145.2 galUS/h

It is not possible to set this value via the U-PACE electronics.

Your overflow status is not delivered correctly to your controller.

Example 2: Your pipe inner diameter is smaller than the inner diameter saved in the device

The following values have been saved in your device at the factory:

Start of measuring range: 1 m/s
End of measuring range: 10 m/s

Due to your smaller inner pipe diameter, less medium will flow through your pipe at 10 m/s, so your maximum flow rate will be lower than what is saved in the device. Likewise, at 1 m/s less medium will flow through your pipe, your minimum flow will also be lower than saved in the device.

Example values:	Device code	Inner diameter	Minimal flow 1 m/s	Maximum flow 10m/s	Cutoff U-PACE
You have ordered:	A1H	4.026 inch	12.1 galUS/h	121 galUS/h	12.1 galUS/h
Your pipe has:	Axx	3.9 inch	11.4 galUS/h	114 galUS/h	11.4 galUS/h

Your device is preset to the following outputs:

Output:	Value [galUS/h]
0 mA	0
4 mA	0
20 mA	121
0 V	0
2 V	0
10 V	121
0 Hz	0
max. Hz	121

You now want to have 20mA at 10m/s on Output 1:

Output 1 must now be adjusted so that the 20mA point is at 114 galUS/h instead of 121 galUS/h

You do not want to see any values below the start of your measuring range:

Cutoff is to be decreased from 12.1 galUS/h to 11.4 galUS/h

You have connected your device via IO-Link and want to use the overflow status:

Your device returns the status "Overflow" at a flow rate of 10 % above the end of the measuring range

Overflow status is set at: 121 galUS/h*1.10 = 133.1 galUS/h
Overflow status would be correct at:
114 galUS/h*1.10 = 125.4 galUS/h

It is not possible to set this value via the U-PACE electronics.

Your overflow status is not delivered correctly to your controller.

A converter for custom internal pipe flow meters can be found at https://www.kobold.com/qr/PIT

After calculating the required user value using the converter, you can convert your device using the user unit (see "Operating Instructions Supplement for U-PACE Electronics"). In this case, you can no longer use the user unit to generate your own units.

10. Status

The electromagnetic flowmeter can detect and display various device or application errors.
If there is a status or error message, the STATUS symbol in the display alternately flashes orange / red. To call up the status / error information, the status key must be pressed, then the status window that appears then lists all the messages that have accumulated up to this point in time. By pressing the ·◁◁◁·· key, the user confirms the knowledge of the displayed errors, the status memory is cleared and the status window is closed. If one of the displayed errors persists, it will be reported again by flashing the status icon.
The following status / error messages are generated:

Display text	**Description**	**Debugging**
Empty Pipe	Measuring tube is not completely filled with medium or medium with too low conductivity is used.	Check the filling of the measuring circuit or conductivity of the medium (> 20 µs / cm)
Meas saturated	Flow measuring circuit overdriven	Reduce flow rate
No Subslave	Internal hardware error	Repair by KOBOLD Service necessary
Simulation	Simulation function active	-
NVM Error	Device error	Repair by Kobold Service necessary

11. IO-Link function

The PITe + U-PACE has an IO-Link communication interface as standard. Process and diagnostic data can be accessed directly via this interface and the device can be parameterized.

Output 1 is factory configured for IO-Link function. If the IO-Link communication mode is active, the "IOLINK" symbol in the status display for the outputs is displayed in green. The setup menu remains locked when the IOLINK mode is active and is inaccessible.
To ensure that the IO-Link device can be operated correctly on the connected IO-Link master, it is necessary to install the device description file matching the device.

The device description files (IODD) are available in the IODDfinder database at **ioddfinder.io-link.com**.

Product type	Device-ID [hex]	Device-ID [dec]
PITe-XXXXXXXXXX	0x010D02	68866

If the device is operated on an IO-Link master with port class A, only a maximum output current of 50 mA may be drawn from output 2 (OUT2) (current or binary output), otherwise the IO-Link master will be overloaded and it can cause malfunctions.

11.1 Specification

Manufacturer	ID 1105 (decimal), 0x0451 (hex)
Manufacturer name	Kobold Messring GmbH
IO-Link specification	V1.1
Bitrate	COM3
Minimum cycle time	1.1 ms
SIO mode	yes (OUT1 in configuration IO-Link)
Block parameterisation	yes
Ready for operation	10 sec.
Max. cable length	20 m
IO-Link master port class	A

12. Technical Information

Operating instructions, data sheet, approvals and further information via the QR code on the device or via www.kobold.com

13. Order Codes

Operating instructions, data sheet, approvals and further information via the QR code on the device or via www.kobold.com

14. Dimensions

Operating instructions, data sheet, approvals and further information via the QR code on the device or via www.kobold.com

15. Disposal

See “General Safety Instructions” - via the QR code on the device or via www.kobold.com

16. Appendix

The specifications and parameters for PITe devices with IO-Link functionality are available on the website

https://ioddfinder.io-link.com

. This provides the necessary information on:
- Process data structure
- Diagnostic functions
- IO-Link commands
- ISDU parameters

Parameters relating to the measured values of flow, temperature, or volume must be entered in the basic units and converted beforehand if necessary. The basic units are:

Flow: L/min
Temperature: °C
Volume: Liters

Units conversion table

Category: **Flow**		
Unit	description	conversion
L/m	Liters per minute (basic unit)	-
L/h	Liters per hour	1 L/h = 0.0167 L/m
mL/m	Milliliters per minute	1 mL/m = 0.001 L/m
m^3/h	Cubic meters per hour	1 m^3/h = 16.667 L/m
gal/m	US gallons per minute	1 gal/m = 3.7854 L/m
gal/h	US gallons per hour	1 gal/h = 0.06309 L/m
galk/m	UK gallons per minute	1 galk/m = 4.54609 L/m
galk/h	UK gallons per hour	1 galk/h = 0.07577 L/m
L/s	Liters per second	1 L/s = 60 L/m
mL/s	Milliliters per second	1 mL/s = 0.0000167 L/m
USER	user unit	1 user unit = USER * L/m

Category: **Volume**		
Unit	description	conversion
L	Liters (basic unit)	-
mL	Milliliters	1 mL = 0.001 L
m^3	Cubik meters	1 m^3 = 1000 L
galUS	US gallons	1 galUS = 3.7854 L
galUK	UK gallons	1 galk = 4.54609 L
barrel	Barrel (US)	1 barrel = 158.99 L
USER	user unit	1 user unit = USER * L

Note	If a measured value is invalid due to an error status (NAN), the corresponding process value is output with the value "0". In this case, the device status and the events must also be taken into account.

17. Manufacturer's declaration

IO-Link

MANUFACTURER'S DECLARATION OF CONFORMITY

We:

Kobold Messring GmbH
Nordring 22-24
65719 Hofheim
Germany

declare under our own responsibility that the product(s):

PITe-XXXXXXXXXX IO-Link Device

to which this declaration refers conform to:

- ☒ IO-Link Interface and System Specification, V1.1.3, June 2019 (NOTE 1,2)
- ☒ IO Device Description, V1.1.3, January 2021
- ☒ Additional conformance to Device Profiles (If checked refer to Part A on page 2)
- ☐ Conformance exceptions (If checked refer to Part B on page 2)

The conformity tests are documented in the test report(s):

IO-Link Device Test Report_PITe_2025-05-26.pdf

Issued at Hofheim, 26.05.2025

Authorized signatory

Name:	Hans Volz	**Name:**	Joseph Burke
Title:	*General Manager*	**Title:**	*Compliance Manager*
Signature:		**Signature:**	

Reproduction and all distribution without written authorization prohibited

NOTE 1 Relevant Test specification is V1.1.3, January 2021
NOTE 2 Additional validity in Package 2020 and Corrigendum

MD-Version: V1.1.3 / 2022-01

Part A - Additional conformance to Device Profiles

	Specification
☒	IO-Link Common Profile Specification, V1.1, Dec. 2021
☐	IO-Link Profile BLOB Transfer & Firmware Update Specification, V1.1, Sept. 2019
☐	IO-Link Smart Sensors 2nd Edition Specification, V1.1, Sept. 2021

Part B - Conformance exceptions

We herewith declare the following deviations to the related specifications	Reason
none	-

18. EU Declaration of Conformance

We, KOBOLD Messring GmbH, Nordring 22-24, 65719 Hofheim, Germany, declare under our sole responsibility that the product:

Magnetic Inductive Flowmeter **Model: PITe + U-PACE**

to which this declaration relates is in conformity with the following EU directives stated below:

2014/35/EU	**Low Voltage Directive**
2014/30/EU	**EMC Directive**
2011/65/EU	**RoHS (category 9)**
2015/863/EU	**Delegated Directive (RoHS III)**

Also, the following standards are fulfilled:

EN IEC 61326-1:2021
Electrical equipment for measurement, control and laboratory use – EMC requirements - Part 1: General requirements, Industrial area (measurement of immunity to RF fields up to 2.7 GHz)

EN 61010-1:2010 + A1:2019 + A1:2019/AC:2019 Safety requirements for electrical equipment for measurement, control and laboratory use - Part 1: General requirements

EN 60529:2014
Degrees of protection provided by enclosures (IP Code)

EN IEC 63000:2018
Technical documentation for the assessment of electrical and electronic products with respect to the restriction of hazardous substances

Hofheim, 23. Oct. 2025

H. Volz
General Manager

J. Burke
Compliance Manager